厚德不锈钢
HOUDE STAINLESS STEEL

ISO 9001 QUALITY ASSURANCE

CE 0036

TS 16949

厚德不锈钢制品有限公司

HOUDE STAINLESS STEEL PRODUCTS CO.,LTD.

企业简介 COMPANY INTRODUCTION

厚德不锈钢制品有限公司，位于河北省沧州市，公司包含沧州市厚德不锈钢制品有限公司和海兴厚德两个实体工厂。公司采用硅溶胶失蜡铸造工艺，引进了先进的铸造生产设备，高精度的数控机床，加工中心。

在质量控制方面，我们引进了瑞士ARL光谱仪，金相显微镜，硬度仪，万能材料试验机，三坐标等检测设备。厚德拥有一套完整的生产线，从模具设计，铸造，加工，表面处理。在技术方面，我们拥有强大的技术研发能力能满足深孔，复杂型腔，定位准确的等顾客特殊的工艺要求。

目前我们的产品材质为304 304L 316 316L WCB等。公司生产及加工各种标准的精密铸件，如GB ASTN ASNI BS DIN JIS等。其广泛应用整个机械制造业和机械加工业。

我们产品主要有各种球阀，闸阀，截止阀，过滤器，快接，叶轮，船用五金，汽车配件等。

Houde Stainless Steel Products Co.,Ltd is located in Cangzhou city Hebei Provinece. It includes Cangzhou Houde Stainless Steel Products Co.,Ltd and Haixing Houde Stainless Steel Products Co.,Ltd. The company introduces the advanced silicon sol lost wax precision casting process, well appointed casting equipments, high-precision CNC machines and machining center.

On the testing aspect, we have Swiss ARL spectrograph, Metallurgical Microscope, hardness tester, Universal testing machine, three-dimensional and other test instrument. Houde casting also has a complete production line from mold design to casting, machining, and surface treatment. On the technical aspect, we have strong technical R&D ability to meet customers' special process demands, such as deep and complex cavity, accurate positioning etc.

Currently our major product materials are 304, 304 L, 316,316L, WCB, and our company produces a variety of precision casting and processing of finished parts by the standards of GB, ASTM, ASNI, BS, DIN, JIS, etc. The application is also very broad, covering almost the entire machinery manufacturing and machining industry in this field.

Our products mainly include all kinds of ball valve, globe valve, gate valve, strainer, quick coupling, and a variety of impeller, marine hardware and automotive accessories and so on.

公司资质 COMPANY CERTIFICATE

CERTIFICATE

The Certification Body
of TÜV SÜD Management Service GmbH
certifies that

Cangzhou HOUDE Stainless Steel Products Co., Ltd.
Yaozhuangzi, Yunhe District
061000 Cangzhou City, Hebei Province
P.R. China

has established and applies
a Quality Management System for

Manufacturing and Sales of Stainless Steel Valves and Fittings

An audit was performed, Report No. 707017471
Proof has been furnished that the requirements
according to

ISO 9001:2008

are fulfilled. The certificate is valid from 2013-10-23 until 2016-10-22.
Certificate Registration No. 12 100 46479 TMS

CERTIFICATE

The Certification Body of
TÜV SÜD Industrie Service GmbH,
a Notified Body of the Pressure Equipment Directive (PED),

certifies that

Cangzhou Houde
Stainless Steel Products Co., Ltd
Yaozhuangzi, Yunhe District, Cangzhou City,
Hebei 061000, P.R. China

implemented, operates and maintains a quality
assurance system as described in the PED (97/23/EC)
Annex III, Module H

for the scope of

design and manufacture of ball valves (max. PN63, DN100)

The audit with the report number Q-PRC-PED-14-01-74631303B-001
proves that the quality assurance system fulfils the PED requirements.

The manufacturer is authorized to provide the pressure equipment
produced within the scope of the assessed quality assurance system with
the following Notified Body number:

CE 0036

Certificate No.: DGR-0036-QS-1145-14
Mannheim, April 28th, 2014

CERTIFICATE

The Certification Body - 0036 -
of TÜV SÜD Industrie Service GmbH

certifies that

Cangzhou Houde Stainless Steel Products Co., Ltd.
Yao Zhuangzi Industrial Park, Yunhe District,
Cangzhou City, Hebei Province, 061000, P. R. China

has implemented, operates and maintains a

Quality Assurance System in accordance with the
Pressure Equipment Directive 97/23/EC,
Annex I, Section 4.3 and EN 764-5, Para. 4.2

as a material manufacturer for the scope of

investment castings in ferritic and austenitic steels.

This certificate is valid through December 2016.

In order to adhere the validity an annual surveillance audit is required.

The validity of this certificate is connected to a valid certification in accordance with ISO 9001:2008.

Certificate No.: DGR-0036-QS-W 614/2013/MUC
Munich, December 19th, 2013

TÜV SÜD Industrie Service GmbH
Certification Body for Pressure Equipment

ZERTIFIKAT

Die Benannte Stelle - Kennnummer 0036 -
der TÜV SÜD Industrie Service GmbH

bescheinigt, dass die Firma

Cangzhou Houde Stainless Steel Products Co., Ltd.
Yao Zhuangzi Industrial Park, Yunhe District,
Cangzhou City, Hebei Province, 061000, P. R. China

als Werkstoffhersteller für

Feinguss aus ferritischen und austenitischen Stählen

über ein zertifiziertes Qualitätsmanagementsystem
entsprechend Anhang I, Absatz 4.3 der Druckgeräterichtlinie
97/23/EG und EN 764-5, Absatz 4.2

verfügt und dieses anwendet.

Das Zertifikat ist gültig bis zum Dezember 2016.

Zertifikat-Nr.: DGR-0036-QS-W 614/2013/MUC
München, 19. Dezember 2013

TÜV SÜD Industrie Service GmbH
Zertifizierungsstelle für Druckgeräte

证 书

TÜV SÜD 管理服务有限公司

沧州市厚德不锈钢制品有限公司

ISO 9001:2008

证书注册号：12 100 46479 TMS

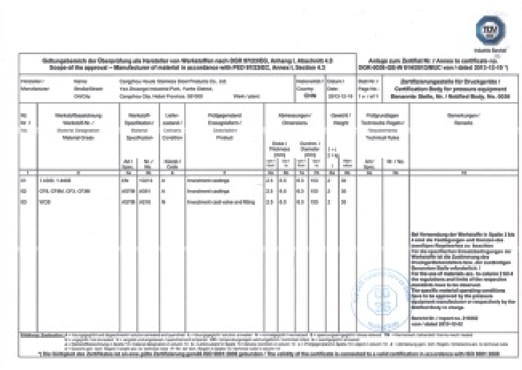

认 证 证 书

海兴厚德不锈钢制品有限公司

ISO/TS 16949:2009

NSF International Strategic Registrations

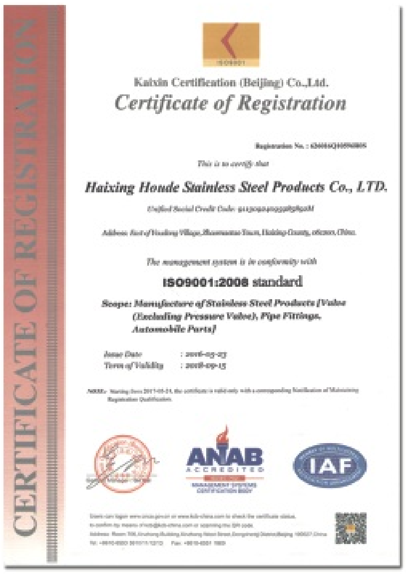

Kaixin Certification (Beijing) Co.,Ltd.
Certificate of Registration

This is to certify that

Haixing Houde Stainless Steel Products Co., LTD.

The management system is in conformity with

ISO9001:2008 standard

Scope: Manufacture of Stainless Steel Products (Valve (Excluding Pressure Valve), Pipe Fittings, Automobile Parts)

Issue Date : 2016-05-23
Term of Validity : 2018-09-15

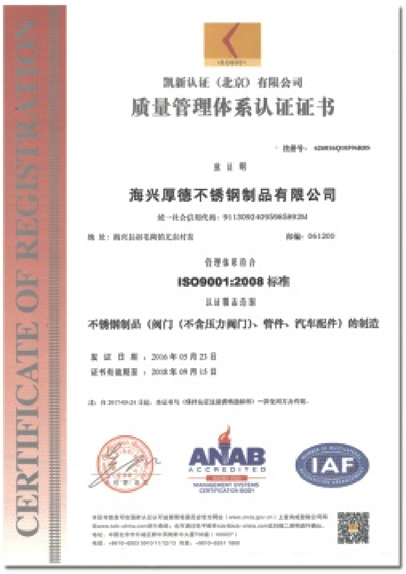

凯新认证（北京）有限公司
质量管理体系认证证书

兹证明

海兴厚德不锈钢制品有限公司

ISO9001:2008 标准

不锈钢制品（阀门（不含压力阀门）、管件、汽车配件）的制造

发证日期：2016年05月23日
证书有效期至：2018年09月15日

Certificate of Registration

Haixing Houde Stainless Steel Products Co., Ltd.

ISO/TS 16949:2009

Scope of Registration:
Manufacture of Precision Casting Parts (Engine, Transmission Parts)

Exclusions: Product Design

NSF International Strategic Registrations

生产场景 PRODUCTION SITE

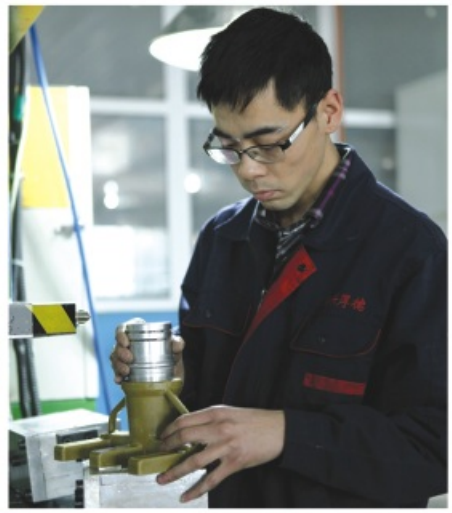

检测设备 TESTING EQUIPMENT

目　录
CONTENTS

内牙MINI球阀 Mini Ball Valve F/F (101S）……04
内外牙MINI球阀 Mini Ball Valve M/F （111S）……05
双外牙MINI球阀 Mini Ball Valve M/M （121S）……06
1PC球阀 1-PC Ball Valve （B101）……07
2PC特轻球阀 2-PC Light Type Ball Valve （B201）……08
2PC轻型球阀 2-PC Light Duty Ball Valve （B211）……09
2PC普通球阀 2-PC Ball Valve （B221）……10
2PC长型DIN3202-M3球阀 2-PC Ball Valve DIN3202-M3 （B231）……11
2PC内外牙球阀 2-PC Ball Valve (M/F) （B241）……12
3PC普通球阀 3-PC Thread Ball Valve （B301）……13
3PC对焊球阀 3-PC Butt Weld Ball Valve （B302）……14
3PC插焊球阀 3-PC Socket Weld Ball Valve （B303）……15
3PC长型3202-M3球阀 3-PC Thread Ball Valve (DIN3202-M3) （B304）……16
3PC长型对焊 3202-S13球阀 3-PC Butt Weld Ball Valve (DIN3202-S13) （B305）……17
3PC启动器球阀 3-PC Ball Valve With Mounting Pad （B301M）……18
1PC德标法兰球阀 1-PC Wafer Flanged Ball Valve(DIN) （B414D）……19
2PC美标法兰球阀 2-PC Flanged Ball Valve (ANSI) （B404A）……20
2PC日标法兰球阀 2-PC Flanged Ball Valve (JIS) （B404J）……21
2PC德标法兰球阀 2-PC Flanged Ball Valve(DIN) （B404D）……22
3PC法兰球阀 3-PC Flanged Ball Valve(DIN) （B304D）……23
2PC高平台美标法兰球阀 2-PC Flanged Ball Valve With Direct Mounting Pad (ANSI) （B404MA）……24
2PC高平台日标法兰球阀 2-PC Flanged Ball Valve With Direct Mounting Pad (JIS)（B404MJ）……25
2PC高平台德标法兰球阀 2-PC Flanged Ball Valve With Direct Mounting Pad (DIN) （B404MD）……26
高平台三通球阀 Three-way Ball Valve Withdirect Mounting Pad（B501M）……27
Y型过滤器 Y-strainer （Y601）……28
水嘴球阀 Bibcock Valve （B261）……29
截止阀-Ⅰ型 Globe Valve （G801）……30
闸阀 Gate Valve （G901）……31
旋启式止回阀 Swing Check Valve （C401）……32
Y型弹簧止回阀 Y-spring Check Valve （C501）……33
1PC弹簧立式止回阀 1-PC Spring Vertical Check Valve （C101）……34
2PC弹簧立式止回阀 2-PC Spring Vertical Check Valve （C201）……35
对夹式止回阀 Disk Check Valve （C601）……36
精密配件 Investment Casting ……37
汽车配件 Auto Parts ……38

内牙MINI球阀
MINI BALL VALVE F/F

B101S

特征 Features:

- 1000PSI/PN63
- 减流量通径 Reduce Port
- 脱蜡精密铸造 Investment Casting
- 阀杆防爆出装置设计 Blow-out Proof Stem
- 卫生级设计 Sanitary Design
- 产品通过PED97/23/EC(CE 0036) 认证
  PED97/23/EC(CE 0036) Approved
- 铸件通过 AD2000-W0认证
  Casting Approved AD2000-W0
- 螺纹符合 Thread:ASME B1.20.1, BS21.0,
  DIN2999/259, ISO228-1, JIS B 0203, ISO7/1
- 检查与测试 Inspection Testing:API598,EN12266

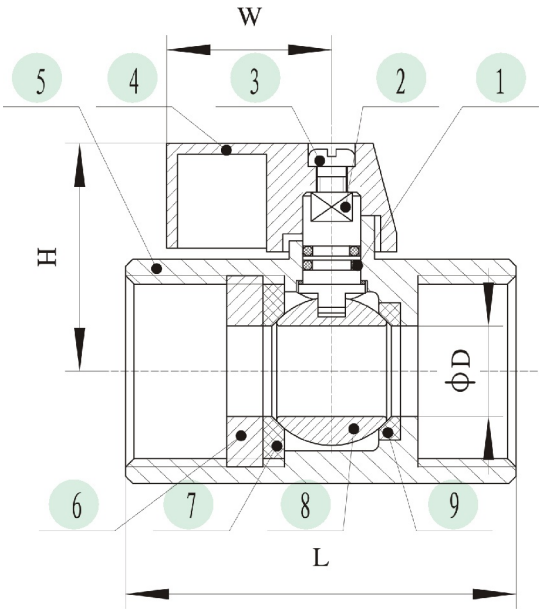

材质清单 Material List

序号 Item	名称 Designation	材质 Material
1	O型密封圈 O-ring	NBR
2	阀杆 Stem	SUS304
3	螺丝 Bolt	SUS304
4	手柄 Lever	铝合金 Aluminum Alloy/CF8
5	阀体 Body	CF8/CF8M
6	阀盖 Cap	CF8/CF8M
7	球座A Ball Seat(a)	RPTFE
8	阀球 Ball	CF8/CF8M
9	球座B Ball Seat(b)	RPTFE

尺寸表 Dimension Table

尺寸Size / 项目Item	1/8"	1/4"	3/8"	1/2"	3/4"	1"
D	7	7	7	9.2	12.5	15
H	26.5	26.5	26.5	28.3	31.5	34
W	22.8	22.8	22.8	22.8	22.8	22.8
L	42	42	42	46	54	65

内外牙MINI球阀
MINI BALL VALVE M/F

B111S

特征 Features:

- 1000PSI/PN63
- 减流量通径 Reduce Port
- 脱蜡精密铸造 Investment Casting
- 阀杆防爆出装置设计 Blow-out Proof Stem
- 卫生级设计 Sanitary Design
- 产品通过PED97/23/EC(CE0036) 认证
  PED97/23/EC(CE0036) Approved
- 铸件通过 AD2000-W0认证
  Casting Approved AD2000-W0
- 螺纹符合 Thread:ASMEB1.20.1, BS21.0,
  DIN2999/259, ISO228-1, JISB 0203, ISO7/1
- 检查与测试 Inspection Testing:API598,EN12266

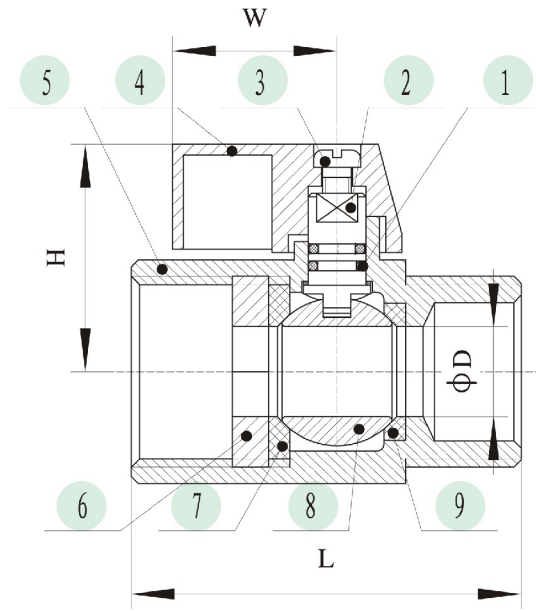

材质清单 Material List

序号 Item	名称 Designation	材质 Material
1	O型密封圈 O-ring	NBR
2	阀杆 Stem	SUS304
3	螺丝 Bolt	SUS304
4	手柄 Lever	铝合金 Aluminum Alloy/CF8
5	阀体 Body	CF8/CF8M
6	阀盖 Cap	CF8/CF8M
7	球座A Ball Seat(a)	RPTFE
8	阀球 Ball	CF8/CF8M
9	球座B Ball Seat(b)	RPTFE

尺寸表 Dimension Table

尺寸Size / 项目Item	1/8"	1/4"	3/8"	1/2"	3/4"	1"
D	7	7	7	9.2	12.5	15
H	26.5	26.5	26.5	28.3	31.5	34
W	22.8	22.8	22.8	22.8	22.8	22.8
L	40	40	40	46	54	65

双外牙MINI球阀
MINI BALL VALVE M/M

B121S

特征 Features:

- 1000PSI/PN63
- 减流量通径 Reduce Port
- 脱蜡精密铸造 Investment Casting
- 阀杆防爆出装置设计 Blow-out Proof Stem
- 卫生级设计 Sanitary Design
- 产品通过PED97/23/EC(CE 0036) 认证
  PED97/23/EC(CE 0036) Approved
- 铸件通过 AD2000-W0认证
  Casting Approved AD2000-W0
- 螺纹符合 Thread:ASME B1.20.1, BS21.0,
  DIN2999/259, ISO228-1, JIS B 0203, ISO7/1
- 检查与测试 Inspection Testing:API598,EN12266

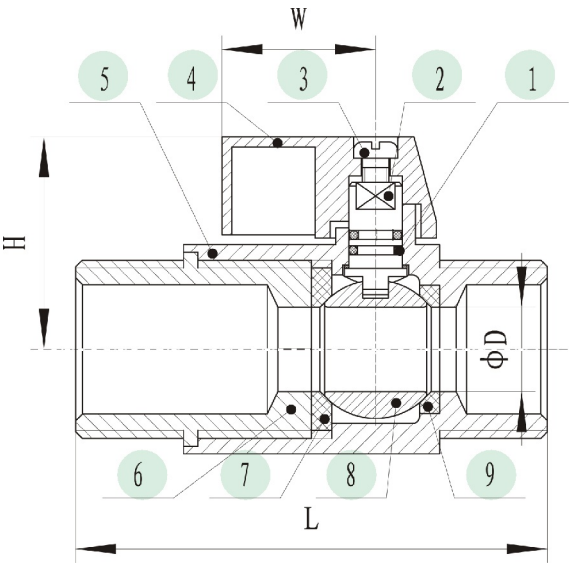

材质清单 Material List

序号 Item	名称 Designation	材质 Material
1	O型密封圈 O-ring	NBR
2	阀杆 Stem	SUS304
3	螺丝 Bolt	SUS304
4	手柄 Lever	铝合金 Aluminum Alloy/CF8
5	阀体 Body	CF8/CF8M
6	阀盖 Cap	CF8/CF8M
7	球座A Ball Seat(a)	RPTFE
8	阀球 Ball	CF8/CF8M
9	球座B Ball Seat(b)	RPTFE

尺寸表 Dimension Table

尺寸Size / 项目Item	1/8"	1/4"	3/8"	1/2"	3/4"	1"
D	7	7	7	9.2	12.5	15
H	26.5	26.5	26.5	28.3	31.5	34
W	22.8	22.8	22.8	22.8	22.8	22.8
L	50	50	50	58	71.5	83

1PC球阀
1-PC BALL VALVE

B101

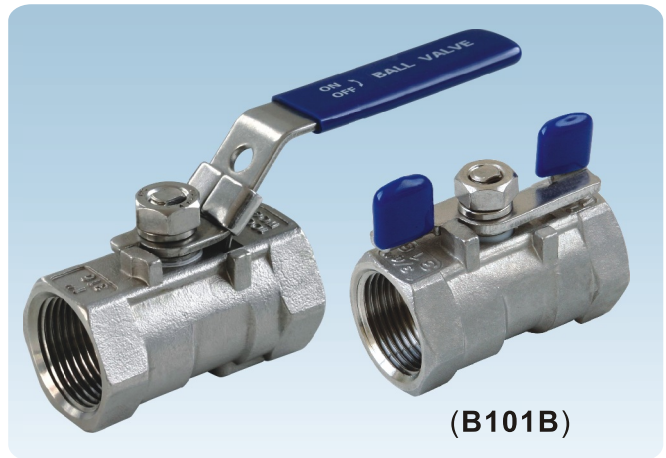

(B101B)

特征 Features:

- 1000PSI/PN63
- 减流量通径 Reduce Port
- 脱蜡精密铸造 Investment Casting
- 阀杆防爆出装置设计 Blow-out Proof Stem
- 加锁手柄（可选）
  Locking Device Handle(Option)
- 产品通过PED97/23/EC(CE0036) 认证
  PED97/23/EC(CE 0036) Approved
- 铸件通过 AD2000-W0认证
  Casting Approved AD2000-W0
- 螺纹符合Thread: ASME B1.20.1, BS21.0,
  DIN2999/259, ISO228-1,JIS B0203,ISO7/1
- 检查与测试 Inspection Testing:API598,EN12266

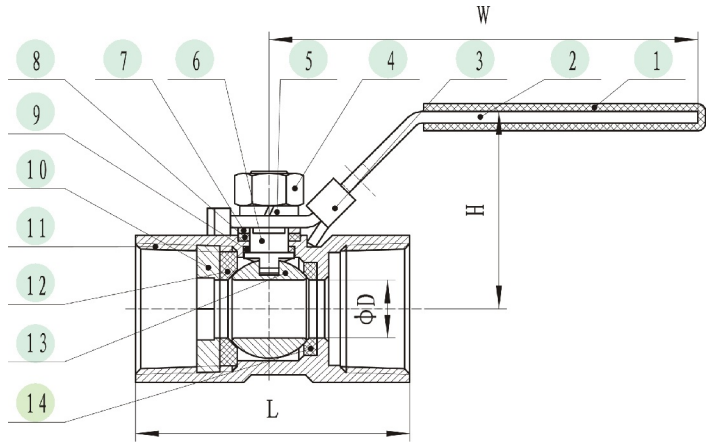

材质清单 Material List

序号 Item	名称 Designation	材质 Material
1	手柄套 Plastic Cover	PVC树脂 Plastic
2	手柄 Handle	SUS304
3	锁块 Locking	SUS304
4	螺母 Stem Nut	SUS304
5	弹簧垫圈 Spring Washer	SUS304
6	阀杆 Stem	SUS304
7	垫片 Pack Ring	SUS304
8	阀杆填料 Stem Packing	PTFE
9	阀杆垫片 Thrust Washer	PTFE
10	阀盖 Cap	CF8/CF8M
11	阀体 Body	CF8/CF8M
12	球座A Ball Seat(a)	RPTFE
13	阀球 Ball	CF8/ CF8M
14	球座B Ball Seat(b)	RPTFE

尺寸表 Dimension Table

尺寸Size / 项目Item	1/4"	3/8"	1/2"	3/4"	1"	11/4"	11/2"	2"	21/2"	3"
D	5	7	9.2	12.5	15	20	25	32	38	50
H	33	35	40	44	51	57	64	68	85	90
W	71	93	95	95	113	113	141	141	189	189
L	39	44	55	59	69	77	81	97	128	153

2PC特轻球阀

2-PC LIGHT TYPE BALL VALVE

B201

特征 Features:

- 1000PSI/PN63
- 全通径 Full Port
- 脱蜡精密铸造 Investment Casting
- 阀杆防爆出装置设计 Blow-out Proof Stem
- 加锁手柄（可选）
  Locking Device Handle(Option)
- 产品通过PED97/23/EC(CE 0036) 认证
  PED97/23/EC(CE 0036) Approved
- 铸件通过 AD2000-W0认证
  Casting Approved AD2000-W0
- 螺纹符合 Thread:ASME B1.20.1, BS21.0, DIN2999/259, ISO228-1, JIS B 0203, ISO7/1
- 检查与测试Inspection Testing:API598,EN12266

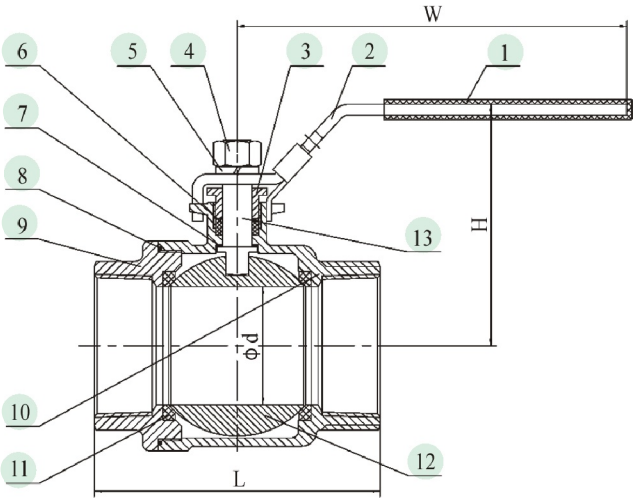

材质清单 Material List

序号 Item	名称 Designation	材质 Material
1	手柄套 Plastic Cover	PVC树脂 Plastic
2	手柄 Handle	SUS304
3	格兰 Gland Nut	SUS304
4	螺母 Stem Nut	SUS304
5	弹簧垫圈 Thrust Washer	SUS304
6	阀杆填料 Stem Packing	PTFE
7	阀杆垫片 Stem Seal	PTFE
8	阀盖垫圈 Body Seal	PTFE
9	阀盖 Cap	CF8/CF8M
10	阀体 Body	CF8/CF8M
11	阀座 Seat	RPTFE
12	阀球 Ball	CF8/CF8M
13	阀轴 Stem	SUS304

尺寸表 Dimension Table

尺寸Size / 项目Item	1/4"	3/8"	1/2"	3/4"	1"	11/4"	11/2"	2"	21/2"	3"	4"
W	76	76	85	95	120	120	150	150	215	215	300
H	41.5	42.7	47.7	56	68	72.3	85	90.8	115.3	125.8	155.5
d	10	10	14.5	19	24	30	37	47	61	76	94
L	42	43	52	61	72	84	94	115	142	165	215

2PC轻型球阀

2-PC LIGHT DUTY BALL VALVE

B211

特征 Features:

- 1000PSI/PN63
- 全通径 Full Port
- 脱蜡精密铸造 Investment Casting
- 阀杆防爆出装置设计 Blow-out Proof Stem
- 加锁手柄（可选）
  Locking Device Handle(Option)
- 产品通过PED97/23/EC(CE0036) 认证
  PED97/23/EC(CE0036) Approved
- 铸件通过 AD2000-W0认证
  Casting Approved AD2000-W0
- 螺纹符合 Thread:ASME B1.20.1, BS21.0, DIN2999/259, ISO228-1, JIS B 0203, ISO7/1
- 检查与测试Inspection Testing:API598,EN12266

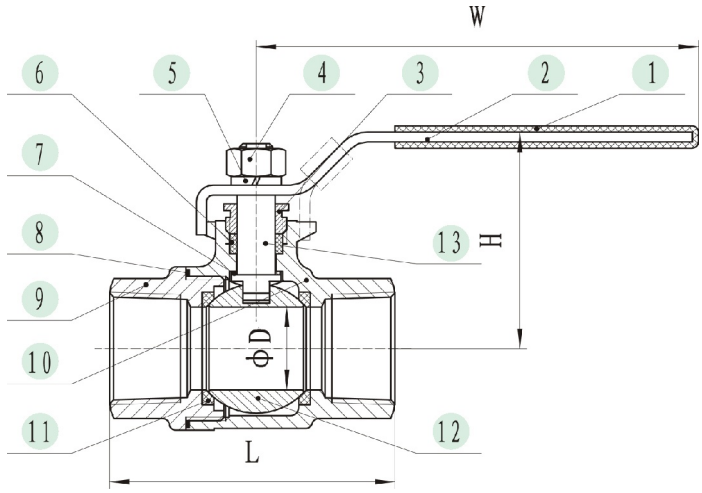

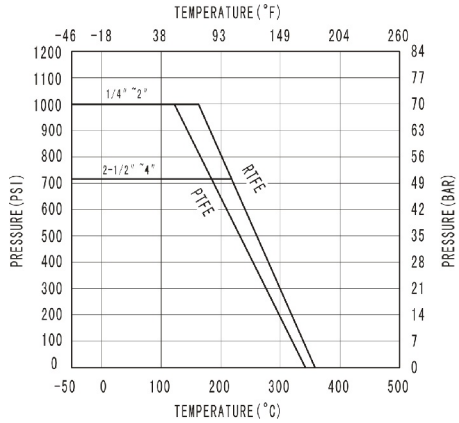

材质清单 Material List

序号 Item	名称 Designation	材质 Material
1	手柄套 Plastic Cover	PVC树脂 Plastic
2	手柄 Handle	SUS304
3	格兰 Gland Nut	SUS304
4	螺母 Stem Nut	SUS304
5	弹簧垫圈 Thrust Washer	SUS304
6	阀杆填料 Stem Packing	PTFE
7	阀杆垫片 Stem Seal	PTFE
8	阀盖垫圈 Body Seal	PTFE
9	阀盖 Cap	CF8/CF8M
10	阀体 Body	CF8/CF8M
11	阀座 Seat	RPTFE
12	阀球 Ball	CF8/CF8M
13	阀轴 Stem	SUS304

尺寸表 Dimension Table

尺寸Size / 项目Item	1/2"	3/4"	1"	11/4"	11/2"	2"
D	15	20	25	32	38	50
H	50	63	65	79	83	97
W	103	133	133	153	153	188
L	58	65	77	90	98	121

2PC普通球阀
2-PC BALL VALVE

B221

特征 Features:

- 1000PSI/PN63
- 全通径 Full Port
- 脱蜡精密铸造 Investment Casting
- 阀杆防爆出装置设计 Blow-out Proof Stem
- 加锁手柄（可选）
  Locking Device Handle(Option)
- 产品通过PED97/23/EC(CE 0036) 认证
  PED97/23/EC(CE 0036) Approved
- 铸件通过 AD2000-W0认证
  Casting Approved AD2000-W0
- 螺纹符合Thread:ASME B1.20.1, BS21.0, DIN2999/259, ISO228-1, JIS B 0203, ISO7/1
- 检查与测试 Inspection Testing:API598, EN12266

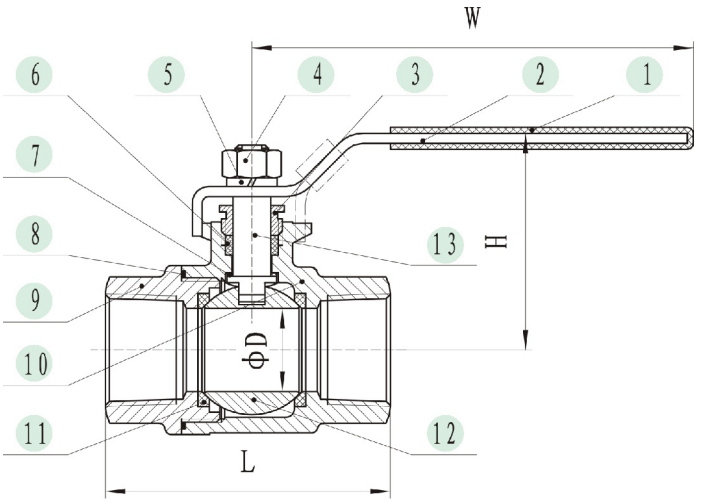

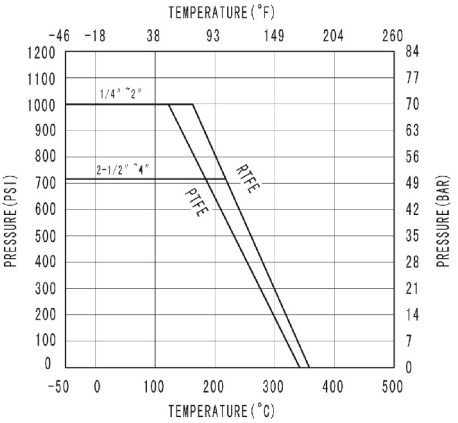

材质清单 Material List

序号 Item	名称 Designation	材质 Material
1	手柄套 Plastic Cover	PVC树脂 Plastic
2	手柄 Handle	SUS304
3	格兰 Gland Nut	SUS304
4	螺母 Stem Nut	SUS304
5	弹簧垫圈 Thrust Washer	SUS304
6	阀杆填料 Stem Packing	PTFE
7	阀杆垫片 Stem Seal	PTFE
8	阀盖垫圈 Body Seal	PTFE
9	阀盖 Cap	CF8/CF8M
10	阀体 Body	CF8/CF8M
11	阀座 Seat	RPTFE
12	阀球 Ball	CF8/CF8M
13	阀杆 Stem	SUS304

尺寸表 Dimension Table

尺寸Size / 项目Item	1/4"	3/8"	1/2"	3/4"	1"	11/4"	11/2"	2"	21/2"	3"	4"
D	11	12.5	15	20	25	32	38	50	65	76	94
H	51	51	53	65	77	82	93	100	118	129	166
W	103	103	103	126	144	144	189	189	224	224	295
L	51	51	63	74	86	98	106	122	159	182	226

2PC长型DIN3202-M3球阀
2-PC BALL VALVE DIN3202-M3

B231

特征 Features:

- 1000PSI/PN63
- 全通径 Full Port
- 脱蜡精密铸造 Investment Casting
- 阀杆防爆出装置设计 Blow-out Proof Stem
- 加锁手柄（可选）
  Locking Device Handle(Option)
- 产品通过PED97/23/EC(CE0036) 认证
  PED97/23/EC(CE0036) Approved
- 铸件通过 AD2000-W0认证
  Casting Approved AD2000-W0
- 长度符合 Length Conform To DIN3202/4-M3
- 螺纹符合Thread:ASME B1.20.1, BS21.0, DIN2999/259, ISO228-1, JIS B 0203, ISO7/1
- 检查与测试Inspection Testing: API598, EN12266

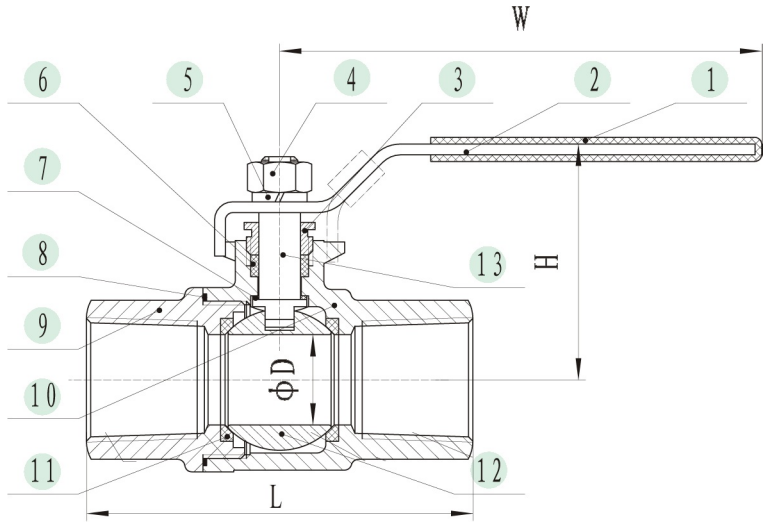

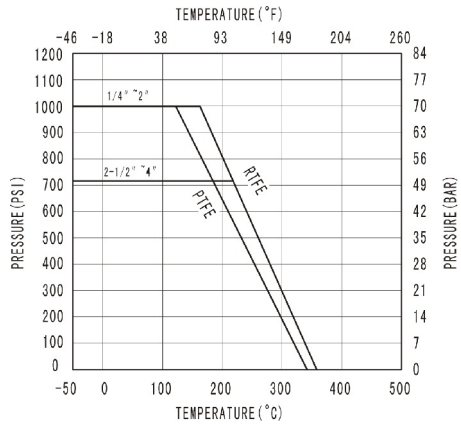

材质清单 Material List

序号 Item	名称 Designation	材质 Material
1	手柄套 Plastic Cover	PVC树脂 Plastic
2	手柄 Handle	SUS304
3	格兰 Gland Nut	SUS304
4	螺母 Stem Nut	SUS304
5	弹簧垫圈 Thrust Washer	SUS304
6	阀杆填料 Stem Packing	PTFE
7	阀杆垫片 Stem Seal	PTFE
8	阀盖垫圈 Body Seal	PTFE
9	阀盖 Cap	CF8/CF8M
10	阀体 Body	CF8/CF8M
11	阀座 Seat	RPTFE
12	阀球 Ball	CF8/CF8M
13	阀杆 Stem	SUS304

尺寸表 Dimension Table

尺寸Size / 项目Item	1/2"	3/4"	1"	11/4"	11/2"	2"
D	15	20	25	32	38	50
H	52	65	77	82	95	102
W	103	126	144	144	189	189
L DIN3202-M3	75	80	90	110	120	140

2PC内外牙球阀
2-PC BALL VALVE (M/F)

B241

特征 Features:

- 1000PSI/PN63
- 全通径 Full Port
- 脱蜡精密铸造 Investment Casting
- 阀杆防爆出装置设计 Blow-out Proof Stem
- 加锁手柄（可选）
  Locking Device Handle(Option)
- 产品通过PED97/23/EC(CE0036) 认证
  PED97/23/EC(CE0036) Approved
- 铸件通过 AD2000-W0认证
  Casting Approved AD2000-W0
- 螺纹符合Thread:ASME B1.20.1, BS21.0,
  DIN2999/259, ISO228-1, JIS B 0203,ISO7/1
- 检查与测试Inspection Testing:API598,EN12266

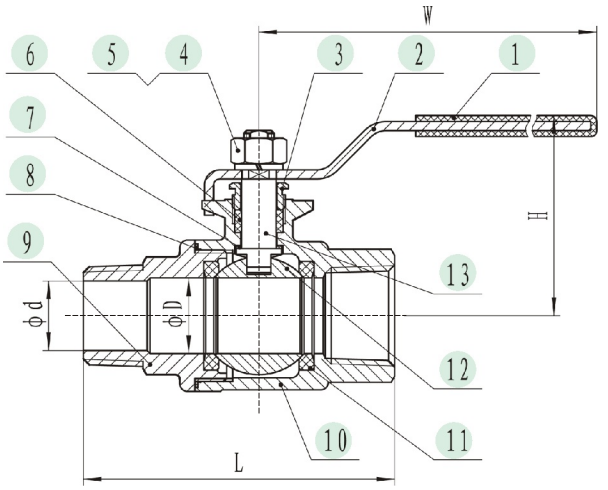

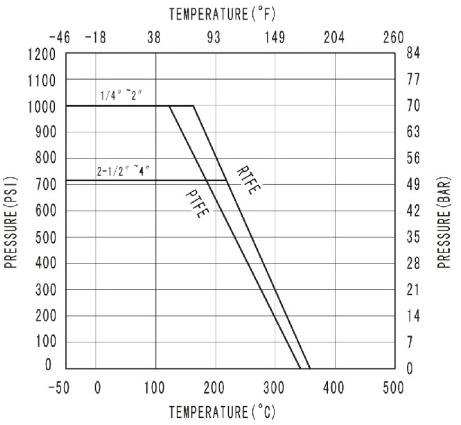

材质清单 Material List

序号 Item	名称 Designation	材质 Material
1	手柄套 Plastic Cover	PVC树脂 Plastic
2	手柄 Handle	SUS304
3	格兰 Gland Nut	SUS304
4	螺母 Stem Nut	SUS304
5	弹簧垫圈 Thrust Washer	SUS304
6	阀杆填料 Stem Packing	PTFE
7	阀杆垫片 Stem Seal	PTFE
8	阀盖垫圈 Body Seal	PTFE
9	阀盖 Cap	CF8/CF8M
10	阀体 Body	CF8/CF8M
11	阀座 Seat	RPTFE
12	阀球 Ball	CF8/CF8M
13	阀杆 Stem	SUS304

尺寸表 Dimension Table

尺寸Size / 项目Item	3/8"	1/2"	3/4"	1"	11/4"	11/2"	2"
D	12.5	15	20	25	32	38	50
d	10.5	13.6	18.2	23	31	36	48
W	103	103	126	144	144	190	190
H	48	50	57	67	72	93	100
L	60	78.5	88.5	100	110.5	121	141.5

3PC普通球阀
3-PC THREAD BALL VALVE

B301

特征 Features:

- 1000PSI/PN63
- 全通径 Full Port
- 脱蜡精密铸造 Investment Casting
- 阀杆防爆出装置设计 Blow-out Proof Stem
- 加锁手柄（可选）
  Locking Device Handle(Option)
- 产品通过PED97/23/EC(CE0036) 认证
  PED97/23/EC(CE0036) Approved
- 铸件通过 AD2000-W0认证
  Casting Approved AD2000-W0
- 螺纹符合 Thread:ASME B1.20.1 BS21.0,
  DIN2999/259, ISO228-1, JIS B 0203,ISO7/1
- 检查与测试 Inspection Testing:API598,EN12266

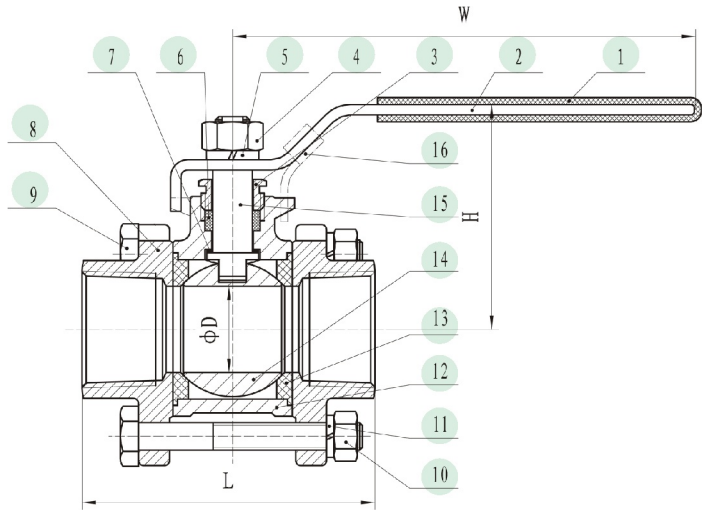

材质清单 Material List

序号 Item	名称 Designation	材质 Material
1	手柄套 Plastic Cover	PVC树脂 Plastic
2	手柄 Handle	SUS304
3	格兰 Gland Nut	SUS304
4	螺母 Stem Nut	SUS304
5	弹簧垫圈 Thrust Washer	SUS304
6	阀杆填料 Stem Packing	PTFE
7	阀杆垫圈 Thrust Washer	PTFE
8	阀盖 Cap	CF8/CF8M
9	螺栓 Bolt	SUS304
10	螺栓螺母 Nut	SUS304
11	弹簧垫圈 Thrust Washer	SUS304
12	阀体 Body	CF8/CF8M
13	阀座 Seat	RPTFE
14	阀球 Ball	CF8/CF8M
15	阀杆 Stem	SUS304
16	锁块 Locking	SUS304

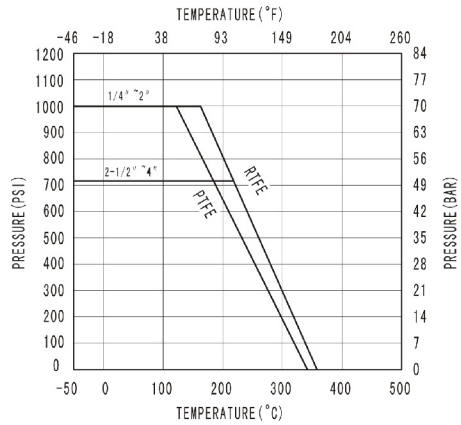

尺寸表 Dimension Table

尺寸Size / 项目Item	1/4"	3/8"	1/2"	3/4"	1"	11/4"	11/2"	2"	21/2"	3"	4"
D	12.5	12.5	15	20	25	32	38	50	65	76	94
H	52	52	53	64	77	82	94	102	116	125	159
W	105	105	105	126	144	144	189	189	224	224	297
L	64	64	72	80	85	105	113	132	170	186	226

3PC对焊球阀
3-PC BUTT WELD BALL VALVE

B302

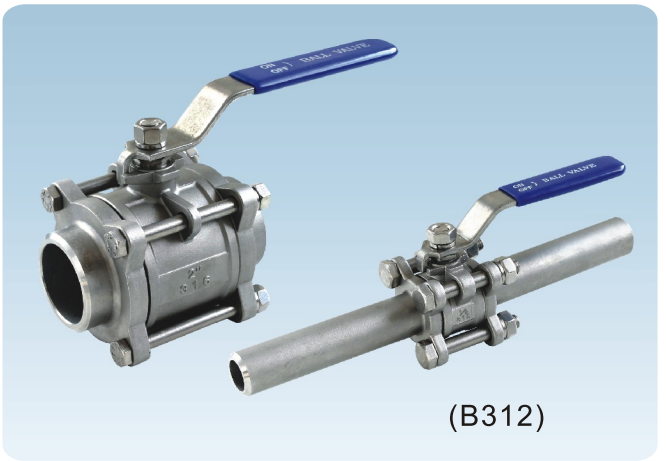
(B312)

特征 Features:

- 1000PSI/PN63
- 全通径 Full Port
- 脱蜡精密铸造 Investment Casting
- 阀杆防爆出装置设计 Blow-out Proof Stem
- 加锁手柄（可选）
  Locking Device Handle(Option)
- 产品通过PED97/23/EC(CE0036) 认证
  PED97/23/EC(CE0036) Approved
- 铸件通过 AD2000-W0认证
  Casting Approved AD2000-W0
- 对焊标准 Butt Weld:ASME B16.25(Sch40)
- 检查与测试 Inspection Testing:API598,EN12266

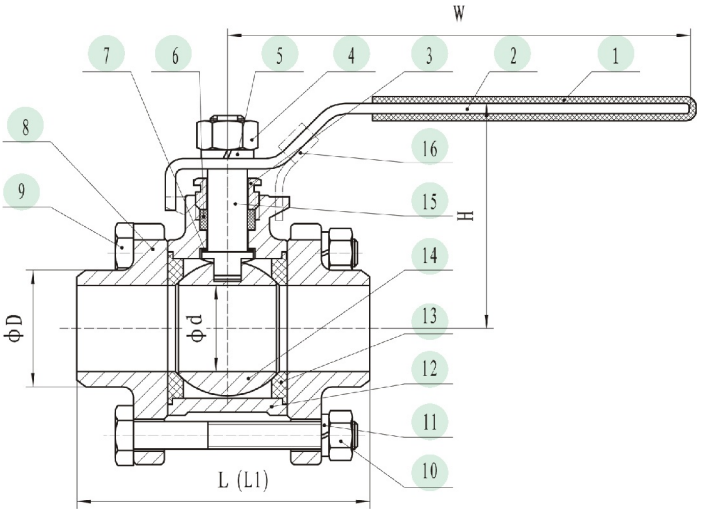

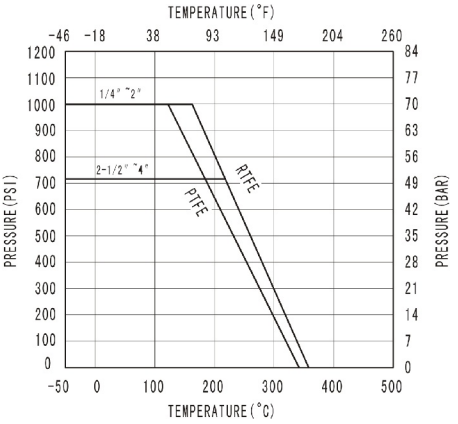

材质清单 Material List

序号 Item	名称 Designation	材质 Material
1	手柄套 Plastic Cover	PVC树脂 Plastic
2	手柄 Handle	SUS304
3	格兰 Gland Nut	SUS304
4	螺母 Stem Nut	SUS304
5	弹簧垫圈 Spring Washer	SUS304
6	阀杆填料 Packing	PTFE
7	阀杆垫圈 Stem Seal	PTFE
8	阀盖 Cap	CF8/CF8M
9	螺栓 Bolt	SUS304
10	螺栓螺母 Nut	SUS304
11	弹簧垫圈 Thrust Washer	SUS304
12	阀体 Body	CF8/CF8M
13	阀座 Seat	RPTFE
14	阀球 Ball	CF8/CF8M
15	阀杆 Stem	SUS304
16	锁块 Locking	SUS304

尺寸表 Dimension Table

尺寸Size / 项目Item	1/4"	3/8"	1/2"	3/4"	1"	11/4"	11/2"	2"	21/2"	3"	4"
d	11.2	11.2	15	20	25	32	38	50	65	76	94
D	15.2	17.2	21.3	26.9	34.5	43.5	50	61.5	77	90	115
H	52	52	53	64	77	82	94	102	116	125	159
W	105	105	105	126	144	144	189	189	224	224	251
L1	225	225	225	225	245	256	260	275	334	345	365
L	62	62	63	78	86	97	112	134	170	189	242

3PC插焊球阀
3-PC SOCKET WELD BALL VALVE

B303

特征 Features:

- 1000PSI/PN63
- 全通径 Full Port
- 脱蜡精密铸造 Investment Casting
- 阀杆防爆出装置设计 Blow-out Proof Stem
- 加锁手柄（可选）
  Locking Device Handle(Option)
- 产品通过PED97/23/EC(CE0036) 认证
  PED97/23/EC(CE0036) Approved
- 铸件通过 AD2000-W0认证
  Casting Approved AD2000-W0
- 插焊端 Socket Weld:ASME B16.11
- 检查与测试 Inspection Testing:API598,EN12266

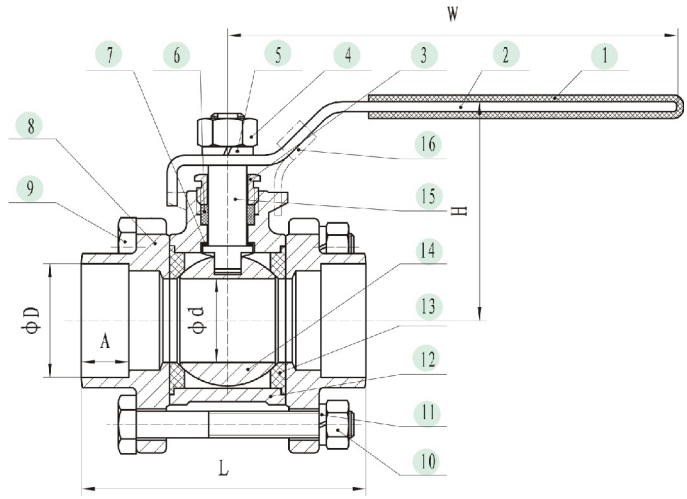

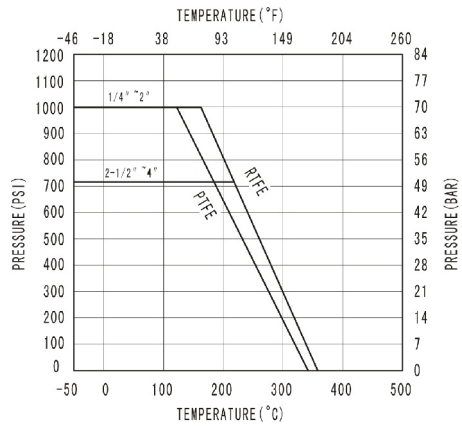

材质清单 Material List

序号 Item	名称 Designation	材质 Material
1	手柄套 Plastic Cover	PVC树脂 Plastic
2	手柄 Handle	SUS304
3	格兰 Gland Nut	SUS304
4	螺母 Stem Nut	SUS304
5	弹簧垫圈 Thrust Washer	SUS304
6	阀杆填料 Stem Packing	PTFE
7	阀杆垫圈 Stem Seal	PTFE
8	阀盖 Cap	CF8/CF8M
9	螺栓 Bolt	SUS304
10	螺栓螺母 Nut	SUS304
11	弹簧垫圈 Thrust Washer	SUS304
12	阀体 Body	CF8/CF8M
13	阀座 Seat	RPTFE
14	阀球 Ball	CF8/CF8M
15	阀杆 Stem	SUS304
16	锁块 Locking	SUS304

尺寸表 Dimension Table

尺寸Size / 项目Item	1/4"	3/8"	1/2"	3/4"	1"	11/4"	11/2"	2"	21/2"	3"	4"
d	12.5	12.5	15	20	25	32	38	50	65	76	94
D	14.1	17.6	21.7	27.1	33.9	42.6	48.7	61.1	77	89.8	115.5
A	10	10	10	13	13	13	13	16	16	16	19
H	52	52	53	64	77	82	94	102	117	126	159
W	105	105	105	126	144	144	189	189	224	224	297
L	64	64	72	80	85	105	113	132	170	186	226

3PC长型3202-M3球阀

3-PC THREAD BALL VALVE (DIN3202-M3)

B304

特征 Features:

- 1000PSI/PN63
- 全通径 Full Port
- 脱蜡精密铸造 Investment Casting
- 阀杆防爆出装置设计 Blow-out Proof Stem
- 加锁手柄（可选）
  Locking Device Handle(Option)
- 产品通过PED97/23/EC(CE 0036) 认证
  PED97/23/EC(CE 0036) Approved
- 铸件通过 AD2000-W0认证
  Casting Approved AD2000-W0
- 长度符合 Length Conform To DIN3202/4-M3
- 螺纹符合 Thread:ASME B1.20.1, BS21.0, DIN2999/259, ISO228-1, JIS B 0203, ISO7/1
- 检查与测试 Inspection Testing: API598, EN12266

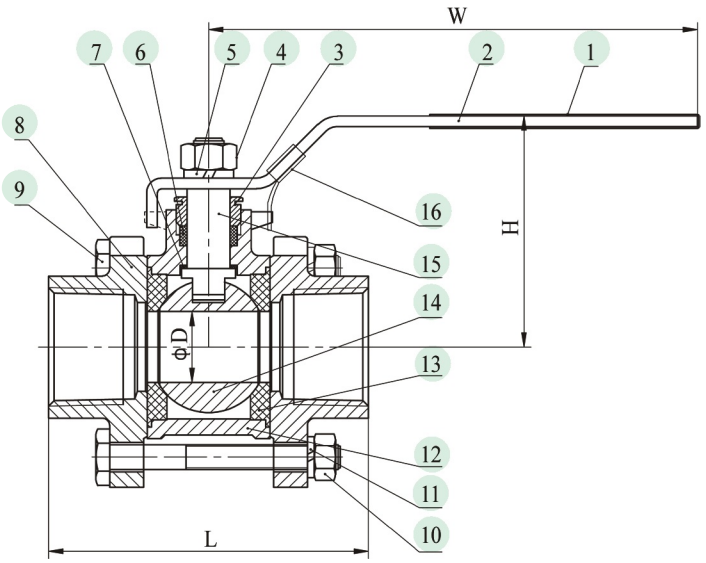

材质清单 Material List

序号 Item	名称 Designation	材质 Material
1	手柄套 Plastic Cover	PVC树脂 Plastic
2	手柄 Handle	SUS304
3	格兰 Gland Nut	SUS304
4	螺母 Stem Nut	SUS304
5	弹簧垫圈 Spring Washer	SUS304
6	阀杆填料 Packing	PTFE
7	阀杆垫圈 Stem Seal	PTFE
8	阀盖 Cap	CF8/CF8M
9	螺栓 Bolt	SUS304
10	螺栓螺母 Nut	SUS304
11	弹簧垫圈 Thrust Washer	SUS304
12	阀体 Body	CF8/CF8M
13	阀座 Seat	RPTFE
14	阀球 Ball	CF8/CF8M
15	阀杆 Stem	SUS304
16	锁块 Locking	SUS304

尺寸表 Dimension Table

尺寸Size / 项目Item	1/2"	3/4"	1"	11/4"	11/2"	2"
D	15	20	25	32	38	50
H	50	52	65	70	85	93
W	105	126	144	144	189	189
L	75	80	90	110	120	140

3PC长型对焊3202-S13球阀

3-PC BUTT WELD BALL VALVE (DIN3202-S13)

B305

特征 Features:

- 1000PSI/PN63
- 全通径 Full Port
- 脱蜡精密铸造 Investment Casting
- 阀杆防爆出装置设计 Blow-out Proof Stem
- 加锁手柄（可选）
  Locking Device Handle(Option)
- 产品通过PED97/23/EC(CE0036) 认证
  PED97/23/EC(CE0036) Approved
- 铸件通过 AD2000-W0认证
  Casting Approved AD2000-W0
- 长度符合 Length Conform To DIN3202-S13
- 对焊标准 Butt Weld:ASME B16.25(Sch40)
- 检查与测试 Inspection Testing: API598, EN12266

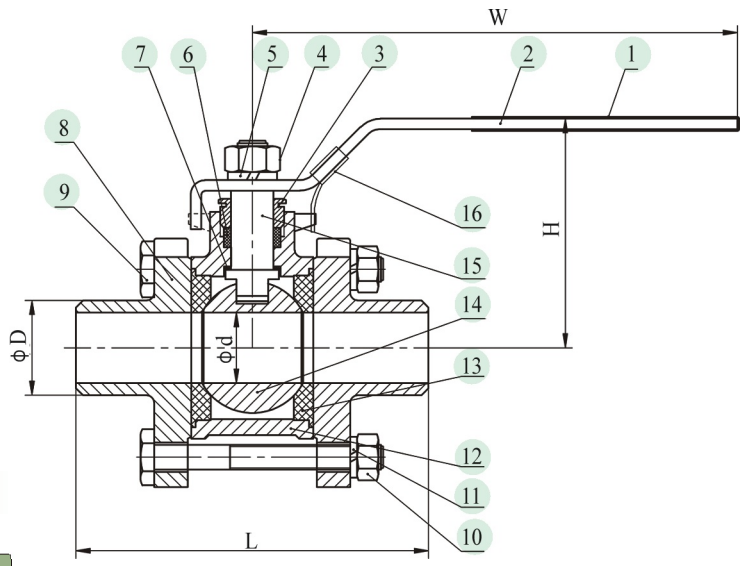

材质清单 Material List

序号 Item	名称 Designation	材质 Material
1	手柄套 Plastic Cover	PVC树脂 Plastic
2	手柄 Handle	SUS304
3	格兰 Gland Nut	SUS304
4	螺母 Stem Nut	SUS304
5	弹簧垫圈 Spring Washer	SUS304
6	阀杆填料 Packing	PTFE
7	阀杆垫圈 Stem Seal	PTFE
8	阀盖 Cap	CF8/CF8M
9	螺栓 Bolt	SUS304
10	螺栓螺母 Nut	SUS304
11	弹簧垫圈 Thrust Washer	SUS304
12	阀体 Body	CF8/CF8M
13	阀座 Seat	RPTFE
14	阀球 Ball	CF8/CF8M
15	阀杆 Stem	SUS304
16	锁块 Locking	SUS304

尺寸表 Dimension Table

尺寸Size / 项目Item	3/8"	1/2"	3/4"	1"	11/4"	11/2"	2"	21/2"	3"	4"
d	12.5	15	20	25	32	38	50	65	76	94
D	17.2	21.3	26.9	34.5	43.5	50	61.5	77	90	115
H	48	50	52	65	70	85	93	116	125	180
W	105	105	126	144	144	189	189	224	224	251
L	70	75	90	100	110	125	150	190	220	270

3PC启动器球阀
3-PC BALL VALVE WITH MOUNTING PAD
B301M

特征 Features:

- 1000PSI/PN63
- 全通径 Full Port
- 脱蜡精密铸造 Investment Casting
- 阀杆防爆出装置设计 Blow-out Proof Stem
- ISO5211 平台设计 Mounting Pad
- 加锁手柄 Locking Device Handle
- 产品通过PED97/23/EC(CE 0036) 认证
  PED97/23/EC(CE 0036) Approved
- 铸件通过 AD2000-W0认证
  Casting Approved AD2000-W0
- 螺纹符合Thread:ASME B1.20.1, BS21.0,
  DIN2999/259, ISO228-1, JIS B 0203,ISO7/1
- 检查与测试 Inspection Testing:API598,EN12266

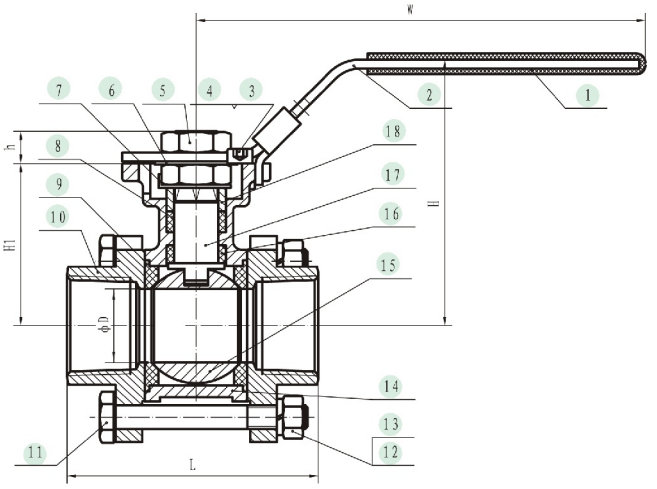

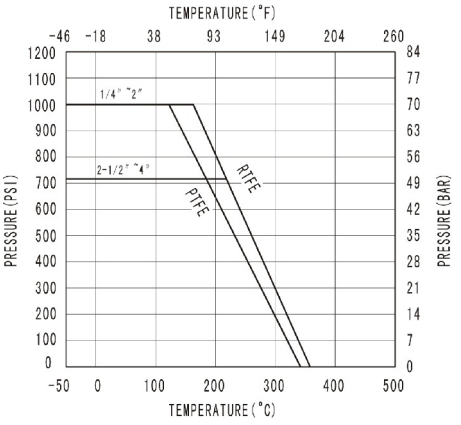

材质清单 Material List

序号 Item	名称 Designation	材质 Material
1	手柄套 Plastic Cover	PVC树脂 Plastic
2	手柄 Handle	SUS304
3	定位螺栓 Bolt	SUS304
4	螺母 Nut	SUS304
5	阀杆螺母 Stem Nut	SUS304
6	垫片 Packing Ring	SUS304
7	防松垫片 Thrust Washer	SUS304
8	阀杆填料 Stem Packing	PTFE
9	阀座 Body Seal	PTFE
10	阀盖 Cap	CF8/CF8M
11	螺栓 Bolt	SUS304
12	弹簧垫圈 Thrust Washer	SUS304
13	螺栓螺母 Nut	SUS304
14	阀体 Body	CF8/CF8M
15	阀球 Ball	CF8/CF8M
16	阀杆垫圈 Stem Seal	PTFE
17	阀杆 Stem	SUS304
18	格兰 Gland Ring	SUS304

尺寸表 Dimension Table

尺寸Size / 项目Item	1/4"	3/8"	1/2"	3/4"	1"	11/4"	11/2"	2"	21/2"	3"	4"
D	11	12.5	15	20	25	32	38	50	65	76	94
H	69	69	72	78	90	95	105	122	155	164	164
W	140	140	140	140	162	162	188	188	233	233	333
H1	38.4	38.4	42	48	55	60	70	85	109	118	115.5
h	9	9	9	9	11	11	14	14	20	20	20
⊠	9	9	9	9	11	11	14	14	17	17	17
ISO5211	F03	F03	F03	F03	F04	F04	F05	F05	F07	F07	F07
	F04	F04	F04	F04	F05	F05	F07	F07	F10	F10	F10
L	64	64	72	80	85	105	113	132	170	186	226

1PC德标法兰球阀
1-PC WAFER FLANGED BALL VALVE(DIN)
B414D

特征 Features:

- PN 16
- 全通径 Full Port
- 脱蜡精密铸造 Investment Casting
- 阀杆防爆出装置设计 Blow-out Proof Stem
- ISO5211平台设计 Mounting Pad
- 加锁手柄 Locking Device Handle
- 产品通过PED97/23/EC(CE0036) 认证
  PED97/23/EC(CE0036) Approved
- 铸件通过 AD2000-W0认证
  Casting Approved AD2000-W0
- 设计标准 Design:EN12516
- 法兰标准 End Flange:DIN2542-DIN2545
- 检查与测试 Inspection Testing:DIN3230, EN12266

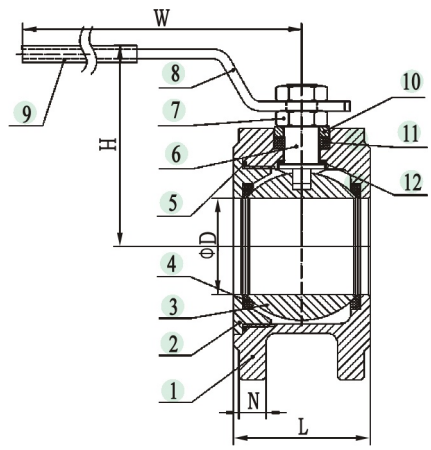

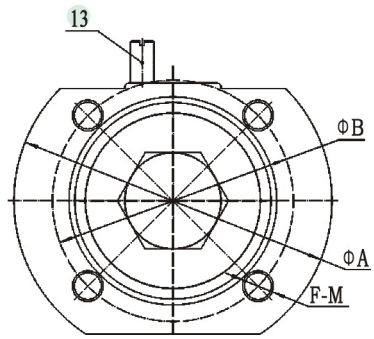

材质清单 Material List

序号 Item	名称 Designation	材质 Material
1	阀体 Body	CF8/CF8M
2	阀盖 Cap	CF8/CF8M
3	阀球 Ball	CF8/CF8M
4	阀座 Seal	PTFE
5	阀盖垫圈 Body Packing	PTFE
6	阀杆 Stem	SUS304
7	螺母 Nut	SUS304
8	手柄 Handle	SUS304
9	手柄套 Plastic Cover	PVC树脂 Plastic
10	格兰 Gland	SUS304
11	阀杆填料 Stem Seat	PTFE
12	阀杆垫圈 Stem Packing	PTFE
13	定位螺栓 Bolt	SUS304

尺寸表 Dimension Table

尺寸 Size / 项目 Item	DN15	DN20	DN25	DN32	DN40	DN50	DN65	DN80	DN100	DN125	DN150	DN200
A	95	105	115	130	150	165	185	200	220	250	285	340
B	65	75	85	100	110	125	145	160	180	210	240	295
D	15	20	25	32	38	50	65	76	80	100	120	150
L	40	44	48	54	62	71	90	110	135	197	231	310
H	63	68	80	87	104	110	128	135	151	192	230	275
W	125	125	167	167	190	240	310	310	295	295	350	350
F	4	4	4	4	4	4	4	8	8	8	8	12
M	M12	M12	M12	M16	M16	M16	M16	M16	M16	M16	M16	M20
N	11.5	12	12	14	11.5	14	15	16.5	19	19	21	23

2PC美标法兰球阀

2-PC FLANGED BALL VALVE (ANSI)

B404A

特征 Features:

- ANSI CLASS 150
- 全通径 Full Port
- 脱蜡精密铸造 Investment Casting
- 阀杆防爆出装置设计 Blow-out Proof Stem
- ISO5211 平台设计 Mounting Pad
- 产品通过PED97/23/EC(CE 0036) 认证
  PED97/23/EC(CE 0036) Approved
- 铸件通过 AD2000-W0认证
  Casting Approved AD2000-W0
- 设计标准 Design:ASME B16.34
- 法兰标准 End Flange:ASME B16.5
- 检查与测试 Inspection Testing:API598

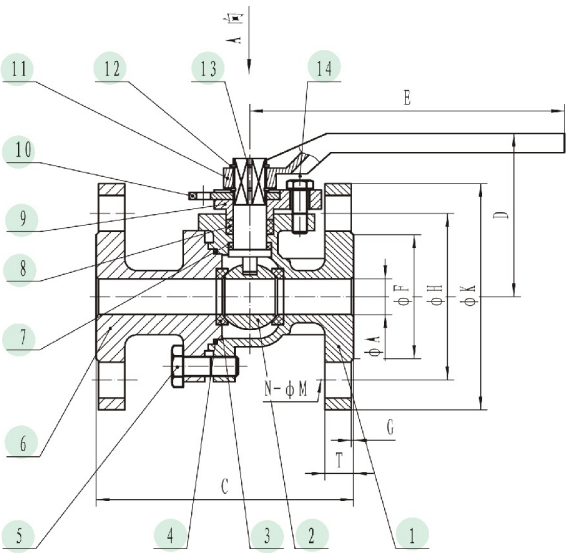

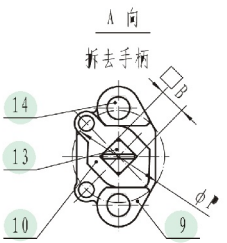

材质清单 Material List

序号 Item	名称 Designation	材质 Material
1	阀体 Body	CF8/CF8M
2	阀球 Ball	CF8/CF8M
3	阀座 Ball Seat	RPTFE
4	阀盖垫圈 Body Seal	PTFE
5	螺栓 Bolt	SUS304
6	阀盖 Cap	CF8/CF8M
7	阀杆垫圈 Stem Seal	PTFE
8	阀杆填料 Stem Packing	PTFE
9	格兰 Gland	CF8
10	止退片 Stopper	SUS304
11	手柄 Handle	CF8
12	卡簧圈 Snap Ring	SUS304
13	阀杆 Stem	SUS304
14	螺栓 Bolt	SUS304

尺寸表 Dimension Table

项目Item / 尺寸Size	A	B	D	E	P	F	H	K	T	G	N	M	C
1/2"	15	11	68	130	42	35	60.5	89	11	2	4	15	108
3/4"	20	11	68	130	42	43	70	98	11	2	4	15	117
1"	25	14	86	160	50	51	79.5	108	12	2	4	15	127
11/4"	32	14	92	160	50	64	89	117	13	2	4	15	140
11/2"	38	17	120	200	70	73	98.5	127	15	2	4	15	165
2"	50	17	131	200	70	92	120.5	152	16	2	4	19	178
21/2"	65	17	144	200	102	105	139.5	178	18	2	4	19	190
3"	76	22	167	325	102	127	152.5	190	19	2	4	19	203
4"	94	22	186	325	102	157	190.5	229	24	2	8	19	229

2PC日标法兰球阀
2-PC FLANGED BALL VALVE (JIS)
B404J

特征 Features:

- JIS 10K
- 全通径 Full Port
- 脱蜡精密铸造 Investment Casting
- 阀杆防爆出装置设计 Blow-out Proof Stem
- ISO5211 平台设计 Mounting Pad
- 产品通过PED97/23/EC(CE 0036) 认证
  PED97/23/EC(CE 0036) Approved
- 铸件通过 AD2000-W0认证
  Casting Approved AD2000-W0
- 设计标准 Design:JIS B2002
- 法兰标准 End Flange:JIS B2238
- 检查与测试 Inspection Testing:JIS B2003, API598

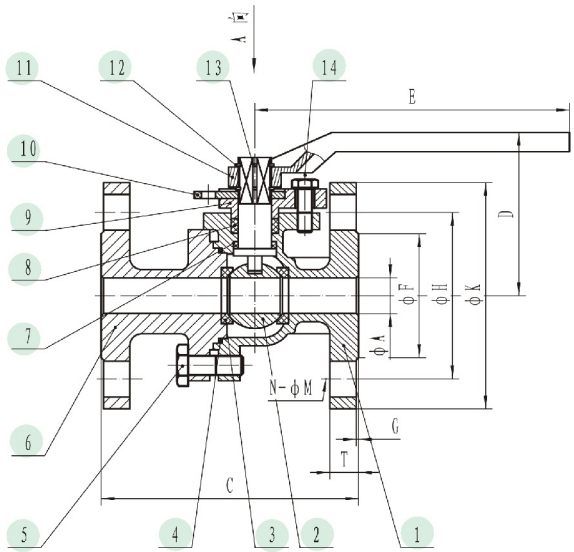

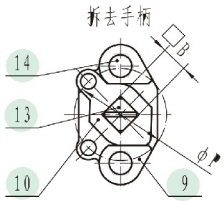

材质清单 Material List

序号 Item	名称 Designation	材质 Material
1	阀体 Body	SCS13A/SCS14A
2	阀球 Ball	SCS13A/SCS14A
3	阀座 Ball Seat	RPTFE
4	阀盖垫圈 Body Seal	PTFE
5	螺栓 Bolt	SUS304
6	阀盖 Cap	SCS13A/SCS14A
7	阀杆垫圈 Stem Seal	PTFE
8	阀杆填料 Stem Packing	PTFE
9	格兰 Gland	SCS13A
10	止退片 Stopper	SUS304
11	手柄 Handle	SCS13A
12	卡簧圈 Snap Ring	SUS304
13	阀杆 Stem	SUS304
14	螺栓 Bolt	SUS304

尺寸表 Dimension Table

项目Item / 尺寸Size	A	B	D	E	P	F	H	K	T	G	N	M	C
1/2"	15	11	73	130	42	52	70	95	12.5	1	4	15	108
3/4"	20	11	76	130	42	58	75	100	14.5	1	4	15	117
1"	25	14	86	160	50	68	90	125	14	1	4	19	127
11/4"	32	14	91	160	50	76	100	135	16	2	4	19	140
11/2"	38	17	119	200	70	81	105	140	17.5	2	4	19	165
2"	50	17	127	200	70	97	120	155	17.5	2	4	19	178
21/2"	65	17	136	200	102	116	140	175	19	2	4	19	190
3"	76	22	164	325	102	127	150	185	20	2	8	19	203
4"	94	22	178	325	102	152	175	210	20	2	8	19	229

2PC德标法兰球阀

2-PC FLANGED BALL VALVE (DIN)

B404D

特征 Features:

- DIN PN10-40
- 全通径 Full Port
- 脱蜡精密铸造 Investment Casting
- 阀杆防爆出装置设计 Blow-out Proof Stem
- ISO5211 平台设计 Mounting Pad
- 产品通过PED97/23/EC(CE 0036) 认证
  PED97/23/EC(CE 0036) Approved
- 铸件通过 AD2000-W0认证
  Casting Approved AD2000-W0
- 设计标准 Design:DIN3357, En12516
- 法兰标准 End Flange:DIN2501, PN10-40
- 结构长度 Face to Face:DIN3202-F4
- 检查与测试 Inspection Testing: DIN3230/3, EN12266

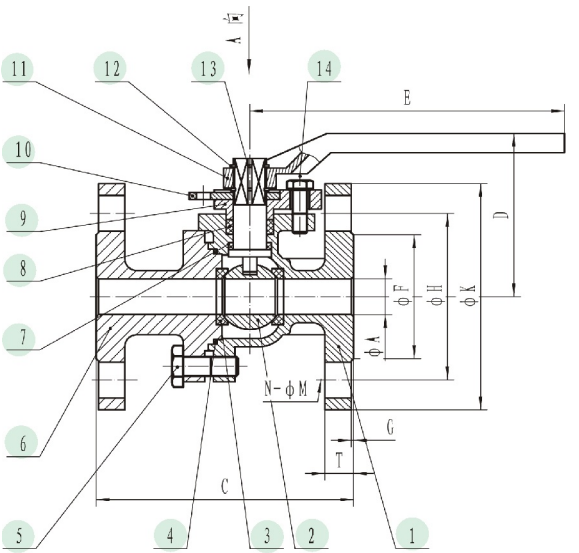

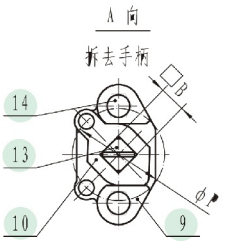

材质清单 Material List

序号 Item	名称 Designation	材质 Material
1	阀体 Body	1.4308/1.4408
2	阀球 Ball	1.4308/1.4408
3	阀座 Ball Seat	RPTFE
4	阀盖垫圈 Body Seal	PTFE
5	螺栓 Bolt	SUS304
6	阀盖 Cap	1.4308/1.4408
7	阀杆垫圈 Stem Seal	PTFE
8	阀杆填料 Stem Packing	PTFE
9	格兰 Gland	1.4308
10	止退片 Stopper	SUS304
11	手柄 Handle	1.4308
12	卡簧圈 Snap Ring	SUS304
13	阀杆 Stem	SUS304
14	螺栓 Bolt	SUS304

尺寸表 Dimension Table

项目 Item / 尺寸 Size	A	B	D	E	C	PN10					PN16			PN25~PN40						
						F	H	K	T	G	M	N		F	H	K	T	G	M	N
1/2"	15	11	73	130	115	45	65	95	14	2	14	4		45	65	95	14	2	14	4
3/4"	20	11	76	130	120	58	75	105	16	2	14	4		58	75	105	16	2	14	4
1"	25	14	86	160	125	68	85	115	18	2	14	4		68	85	115	18	2	14	4
11/4"	32	14	91	160	130	78	100	140	18	2	18	4		78	100	140	18	2	18	4
11/2"	38	17	119	200	140	88	110	150	18	3	18	4		88	110	150	18	3	18	4
2"	50	17	127	200	150	102	125	165	18	3	18	4		102	125	165	20	3	18	4
21/2"	65	17	136	200	170	122	145	185	18	3	18	4		122	145	185	22	3	18	8
3"	76	22	164	325	180	138	160	200	20	3	18	8		138	160	200	24	3	18	8
4"	94	22	178	325	190	158	180	220	20	3	18	8		162	190	235	24	3	22	8

3PC法兰球阀
3-PC FLANGED BALL VALVE (DIN)
B304D

特征 Features:

- PN25~40
- 全通径 Full Port
- 脱蜡精密铸造 Investment Casting
- 阀杆防爆出装置设计 Blow-out Proof Stem
- 产品通过PED97/23/EC(CE 0036) 认证
  PED97/23/EC(CE 0036) Approved
- 铸件通过 AD2000-W0认证
  Casting Approved AD2000-W0
- 设计标准 Design:DIN3357,EN12516
- 法兰标准 End Flange:DIN2501, PN10-40
- 结构长度 Face to Face:DIN3202-F1
- 检查与测试 Inspection Testing:DIN3230/3, EN12266

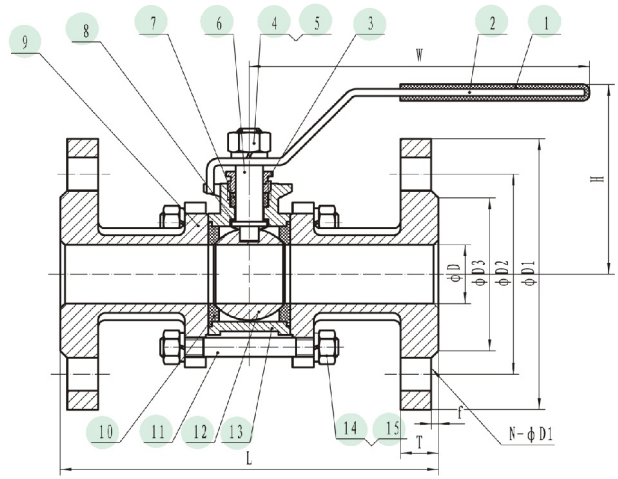

材质清单 Material List

序号 Item	名称 Designation	材质 Material
1	手柄套 Cover	PVC树脂 Plastic
2	手柄 Handle	SUS304
3	格兰 Gland	SUS304
4	螺母 Stem Nut	SUS304
5	弹簧垫圈 Thrust Washer	SUS304
6	阀杆 Stem	SUS304
7	阀杆填料 Stem Packing	PTFE
8	阀杆垫圈 Stem Washer	PTFE
9	阀盖 Cap	CF8/CF8M
10	阀座 Seat	RPTFE
11	螺栓 Bolt	SUS304
12	阀球 Ball	CF8/CF8M
13	阀体 Body	CF8/CF8M
14	螺栓螺母 Nut	SUS304
15	弹簧垫圈 Thrust Washer	SUS304

尺寸表 Dimension Table

尺寸Size / 项目Item	1/2"	3/4"	1"	11/4"	11/2"	2"	21/2"	3"	4"
D	15	20	25	32	38	50	65	76	94
D1	95	105	115	140	150	165	185	200	235
D2	65	75	85	100	110	125	145	160	190
D3	45	58	68	78	88	102	122	138	162
f	2	2	2	2	3	3	3	3	3
T	16	18	18	18	18	20	22	24	24
N-φd	4-φ14	4-φ14	4-φ14	4-φ18	4-φ18	4-φ18	8-φ18	8-φ18	8-φ22
L	130	150	160	180	200	230	290	310	350
W	117	120	148	148	202	202	263	263	293
H	76	84	100	105	116	124	168	177	200

2PC高平台美标法兰球阀

2-PC FLANGED BALL VALVE WITH DIRECT MOUNTING PAD (ANSI)

B404MA

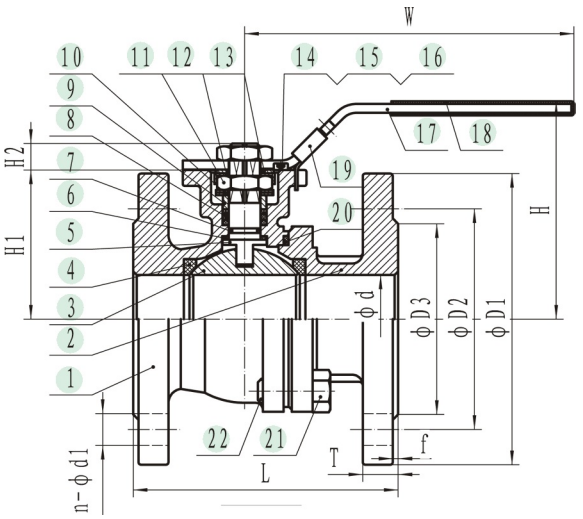

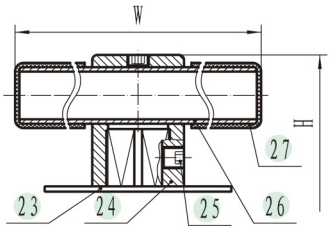

DN125~DN150

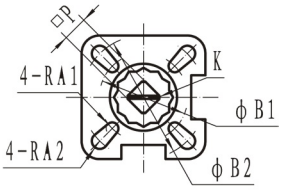

特征 Features:

- ANSI CLASS 150
- 全通径 Full Port
- 脱蜡精密铸造 Investment Casting
- 阀杆防爆出装置设计 Blow-out Proof Stem
- ISO5211 平台设计 Mounting Pad
- 产品通过PED97/23/EC(CE 0036) 认证
  PED97/23/EC(CE 0036) Approved
- 铸件通过 AD2000-W0认证
  Casting Approved AD2000-W0
- 设计标准 Design:ASME B16.34
- 法兰标准 End Flange:ASME B16.5
- 检查与测试 Inspection Testing:API598

材质清单 Material List

序号 Item	名称 Designation	材质 Material
1	阀体 Body	CF8/CF8M
2	阀盖 Cap	CF8/CF8M
3	阀球 Ball	CF8/CF8M
4	阀座 Ball Seat	RPTFE
5	阀杆 Stem	SUS304
6	阀杆垫圈 Stem Packing	PTFE
7	O型密封圈 O-ring	NBR
8	V型填料 V-ring Packing	PTFE
9	格兰 Gland	SUS304
10	碟型弹片 Believille Washer	SUS301
11	螺母 Nut	SUS304
12	防松垫圈 Thrust Washer	SUS304
13	垫片 Washer	SUS304
14	定位螺丝 Stop Bolt	SUS304
15	定位螺母 Nut	SUS304
16	垫片 Washer	SUS304
17	手柄 Handle	SUS304
18	手柄套 Plastic Cover	PVC树脂 Plastic
19	锁块 Locking	SUS304
20	阀盖垫圈 Body Gasket	PTFE
21	螺栓螺母 Nut	SUS304
22	螺栓 Bolt	SUS304
23	定位板 Triangle Stopper	SUS304
24	手柄接头 Handie Adapter	SUS304
25	锁紧螺丝 Set Screwed	SUS304
26	手柄 Handle	SUS304
27	手柄套 Plastic Cover	PVC树脂 Plastic

尺寸表 Dimension Table

尺寸 Size	1/2″	3/4″	1″	11/4″	11/2″	2″	21/2″	3″	4″	5″	6″
φd	15	20	25	32	38	50	65	76	100	120	150
L	108	117	127	140	165	178	190	203	229	356	394
T	9.7	10.5	11.2	12.7	14.7	16.3	17.9	19.5	24.3	24	25.4
f	1.6	1.6	1.6	1.6	2	2	2	2	2	2	2
D1	89	98.6	108	117	125	150	180	190	230	254	279.4
D2	60.5	70	79.2	88.9	98.4	120.7	139.7	152.4	190.5	216	241.3
D3	35	43	51	63.5	73.2	92	104.7	127	157.2	186	216
n	4	4	4	4	4	4	4	4	8	8	8
φd1	16	16	16	16	16	19	19	19	19	22.4	22.4
H1	48.3	53	58.5	71	76	84.5	101.5	111.5	141	160	184
H2	9	9	11	11	14	14	17	17	22	40.5	40.5
H	80	85	95	108	114	124	148	158	191	242	270
W	140	140	160	160	185	185	230	230	230	500	800
K	M12×1.5	M12×1.5	M14×1.5	M14×1.5	M18×1.5	M18×1.5	M22×1.5	M22×1.5	M28×2	M36×2	M36×2
P	9	9	11	11	14	14	17	17	22	27	27
A1	3	3	3	3	3.5	3.5	4.5	4.5		M12	M12
A2	3	3	3.5	3.5	4.5	4.5	5.5	5.5	M10		
B1	36	36	42	42	50	50	70	70		125	125
B2	42	42	50	50	70	70	102	102	102		

2PC高平台日标法兰球阀

2-PC FLANGED BALL VALVE WITH DIRECT MOUNTING PAD (JIS)

B404MJ

特征 Features:

- JIS 10K
- 全通径 Full Port
- 脱蜡精密铸造 Investment Casting
- 阀杆防爆出装置设计 Blow-out Proof Stem
- ISO5211 平台设计 Mounting Pad
- 产品通过PED97/23/EC(CE0036) 认证
  PED97/23/EC(CE0036) Approved
- 铸件通过 AD2000-W0认证
  Casting Approved AD2000-W0
- 设计标准 Design:JIS B2002
- 法兰标准 End Flange:JIS B2238
- 检查与测试 Inspection Testing:JIS B2003,API598

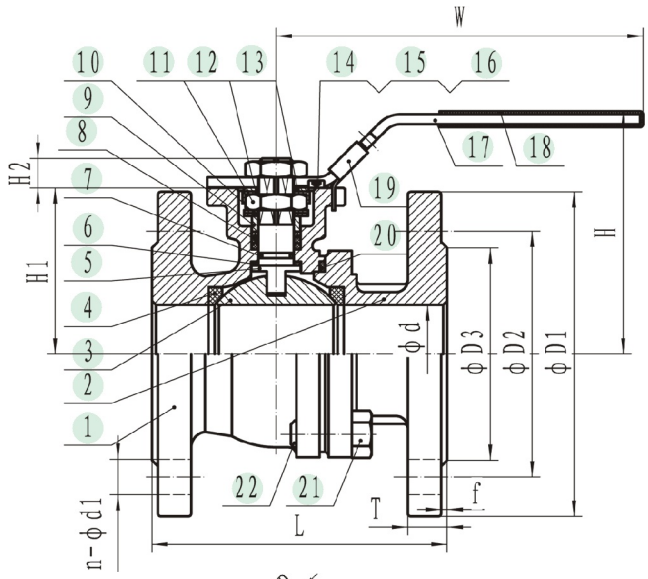

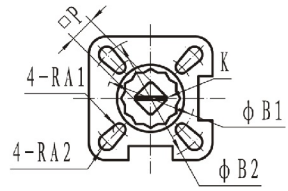

材质清单 Material List

序号 Item	名称 Designation	材质 Material
1	阀体 Body	SSC13A/SSC14A
2	阀盖 Cap	SSC13A/SSC14A
3	阀球 Ball	SSC13A/SSC14A
4	阀座 Ball Seat	RPTFE
5	阀杆 Stem	SUS304
6	阀杆垫圈 Stem Packing	PTFE
7	O型密封圈 O-ring	NBR
8	V型填料 V-ring Packing	PTFE
9	格兰 Gland	SUS304
10	碟型弹片 Believille Washer	SUS301
11	螺母 Nut	SUS304
12	防松垫圈 Thrust Washer	SUS304
13	垫片 Washer	SUS304
14	定位螺丝 Stop Bolt	SUS304
15	定位螺母 Nut	SUS304
16	垫片 Washer	SUS304
17	手柄 Handle	SUS304
18	手柄套 Plastic Cover	PVC树脂 Plastic
19	锁块 Locking	SUS304
20	阀盖垫圈 Body Gasket	PTFE
21	螺栓螺母 Nut	SUS304
22	螺栓 Bolt	SUS304

尺寸表 Dimension Table

尺寸 Size	15A	20A	25A	32A	40A	50A	65A	80A	100A
ϕd	15	20	25	32	38	50	65	76	100
L	108	117	127	140	165	178	190	203	229
T	12	14	14	16	16	16	18	18	18
f	1	1	1	2	2	2	2	2	2
D1	95	100	125	135	140	155	175	185	210
D2	70	75	90	100	105	120	140	150	175
D3	51	56	67	76	81	96	116	126	151
n	4	4	4	4	4	4	4	8	8
ϕd1	15	15	19	19	19	19	19	19	19
H1	48	53	64	71	76	84.5	101.5	111.5	141
H2	9	9	11	11	14	14	17	17	22
H	80	85	100	108	114	124	148	158	189
W	140	140	160	160	185	185	230	230	320
K	M12×1.5	M12×1.5	M14×1.5	M14×1.5	M18×1.5	M18×1.5	M22×1.5	M22×1.5	M28×2
P	9	9	11	11	14	14	17	17	22
A1	3	3	3	3	3.5	3.5	4.5	4.5	
A2	3	3	3.5	3.5	4.5	4.5	5.5	5.5	M10
B1	36	36	42	42	50	50	70	70	
B2	42	42	50	50	70	70	102	102	102

2PC高平台德标法兰球阀

2-PC FLANGED BALL VALVE WITH DIRECT MOUNTING PAD (DIN)

B404MD

特征 Features:

- DIN PN10-40
- 全通径 Full Port
- 脱蜡精密铸造 Investment Casting
- 阀杆防爆出装置设计 Blow-out Proof Stem
- ISO5211 平台设计 Mounting Pad
- 产品通过PED97/23/EC(CE0036) 认证
  PED97/23/EC(CE0036) Approved
- 铸件通过 AD2000-W0认证
  Casting Approved AD2000-W0
- 设计标准 Design:DIN3357,EN12516
- 法兰标准 End Flange:DIN2543~2545, PN10-40
- 结构长度 Face to Face:DIN3202-F4(DN15-DN100)
  DIN3202-F5(DN125-DN150)
- 检查与测试 Inspection Testing:DIN3230/3,EN12266

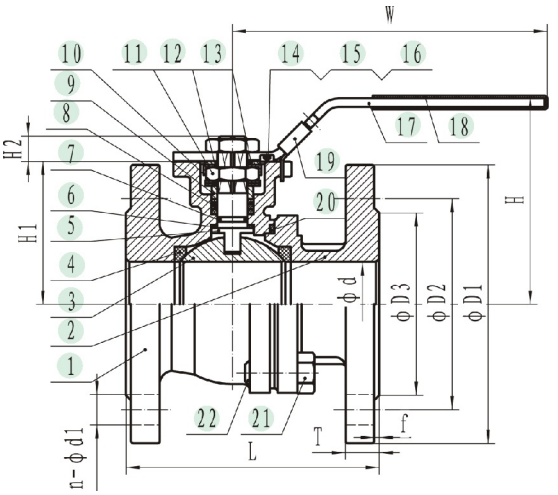

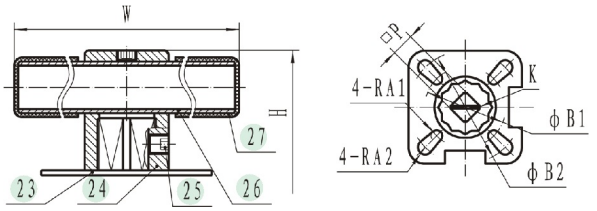

DN125~DN150

材质清单 Material List

序号 Item	名称 Designation	材质 Material
1	阀体 Body	1.4408/1.4308
2	阀盖 Cap	1.4408/1.4308
3	阀球 Ball	1.4408/1.4308
4	阀座 Ball Seat	RPTFE
5	阀杆 Stem	SUS304
6	阀杆垫圈 Stem Packing	PTFE
7	O型密封圈 O-ring	NBR
8	V型填料 V-ring Packing	PTFE
9	格兰 Gland	SUS304
10	碟型弹片 Believille Washer	SUS301
11	螺母 Nut	SUS304
12	防松垫圈 Thrust Washer	SUS304
13	垫片 Washer	SUS304
14	定位螺丝 Stop Bolt	SUS304
15	定位螺母 Nut	SUS304
16	垫片 Washer	SUS304
17	手柄 Handle	SUS304
18	手柄套 Plastic Cover	PVC树脂 Plastic
19	锁块 Locking	SUS304
20	阀盖垫圈 Body Gasket	PTFE
21	螺栓螺母 Nut	SUS304
22	螺栓 Bolt	SUS304
23	定位板 Triangle Stopper	SUS304
24	手柄接头 Handie Adapter	SUS304
25	锁紧螺丝 Set Screwed	SUS304
26	手柄 Handle	SUS304
27	手柄套 Plastic Cover	PVC树脂 Plastic

尺寸表 Dimension Table

尺寸 Size	DN15	DN20	DN25	DN32	DN40	DN50	DN65	DN80	DN100	DN125	DN150
PN	10、16、25、40						10、16				
ϕd	15	20	25	32	38	50	65	76	100	120	150
L	115	120	125	130	140	150	170	180	190	325	350
T	16	18	18	18	18	20	18	20	20	22	22
f	2	2	2	2	3	3	3	3	3	3	3
D1	95	105	115	140	150	165	185	200	220	250	285
D2	65	75	85	100	110	125	145	160	180	210	240
D3	45	58	68	78	88	102	122	138	158	188	212
n	4	4	4	4	4	4	4	8	8	8	8
ϕd1	14	14	14	18	18	18	18	18	18	18	22
H1	48	53	58.5	71	76	84.5	101.5	111.5	141	160	184
H2	9	9	11	11	14	14	17	17	22	40.5	40.5
H	80	85	95	108	114	124	148	158	189	242	270
W	140	140	160	160	185	185	230	230	320	500	800
K	M12×1.5	M12×1.5	M14×1.5	M14×1.5	M18×1.5	M18×1.5	M22×1.5	M22×1.5	M28×2	M36×2	M36×2
P	9	9	11	11	14	14	17	17	22	27	27
A1	3	3	3	3	3.5	3.5	4.5	4.5		M12	M12
A2	3	3	3.5	3.5	4.5	4.5	5.5	5.5	M10		
B1	36	36	42	42	50	50	70	70		125	125
B2	42	42	50	50	70	70	102	102	102		

高平台三通球阀

THREE-WAY BALL VALVE WITH DIRECT MOUNTING PAD

B501M

尺寸表 Dimension Table

尺寸Size / 项目Item	1/4"	3/8"	1/2"	3/4"	1"	11/4"	11/2"	2"
D	9	11	12.5	16	20	25	32	38
W	139	139	139	139	160	160	185	185
H	73	73	73	80	95	98	110	119
H1	42	42	42	49	59.5	63	73.5	82.8
h	9	9	9	9	11	11	14	14
M	36	36	36	36	42	42	50	50
N	42	42	42	42	50	50	70	70
J	9	9	9	9	11	11	14	14
L	79	79	79	83	104	111	126	147
L1	64	64	64	68	82	90	106	123

特征 Features:

- 1000PSI/PN63
- 减流量通径 Reduce Port
- 脱蜡精密铸造 Investment Casting
- 阀杆防爆出装置设计 Blow-out Proof Stem
- ISO5211 平台设计 Mounting Pad
- 产品通过PED97/23/EC(CE 0036) 认证
  PED97/23/EC(CE 0036) Approved
- 铸件通过 AD2000-W0认证
  Casting Approved AD2000-W0
- L型或T型通径 L or T Port Option
- 4个阀座设计 4 Seats For Rigid Ball Supporting
- 螺纹符合 Thread:ASME B1.20.1, BS21.0, DIN2999/259, ISO228-1, JIS B 0203, ISO7/1
- 检查与测试 Inspection Testing:API598, EN12266

材质清单 Material List

序号 Item	名称 Designation	材质 Material
1	阀体 Body	CF8/CF8M
2	阀盖（A） Cap(A)	CF8/CF8M
3	阀座 Ball Seat	RPTFE
4	阀盖垫圈 Body Packing	PTFE
5	阀杆填料 Stem Packing	PTFE
6	格兰 Gland Nut	SUS304
7	碟型弹片 Spring Washer	SUS301
8	螺母 Nut	SUS304
9	垫片 Washer	SUS304
10	防松垫圈 Thrust Washer	SUS304
11	阀杆 Stem	SUS304
12	O型密封圈 O-ring	NBR
13	阀杆垫圈 Stem Seal	PTFE
14	阀球 Ball	CF8/CF8M
15	锁块 Locking	SUS304
16	手柄 Handle	SUS304
17	手柄套 Plastic Cover	Plastic
18	阀盖（B） Cap(B)	CF8/CF8M

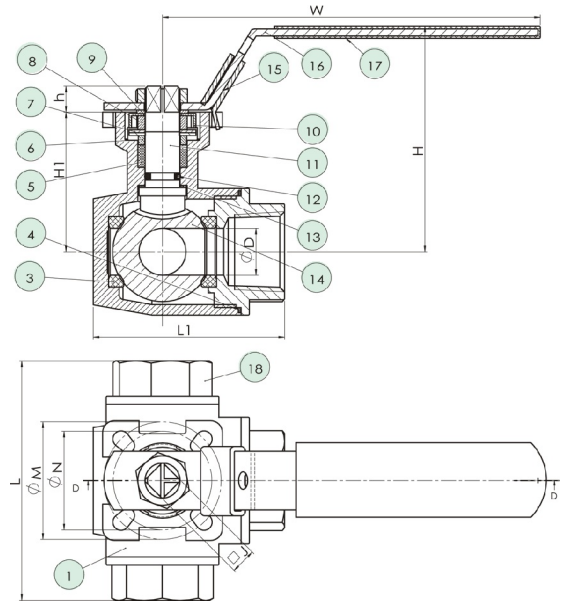

流向指示 Flow Direction Indication

型号Type L

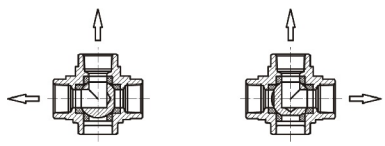

型号Type T

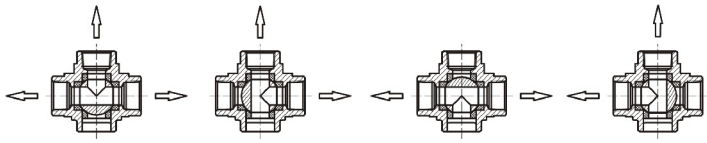

Y型过滤器
Y-STRAINER

Y601

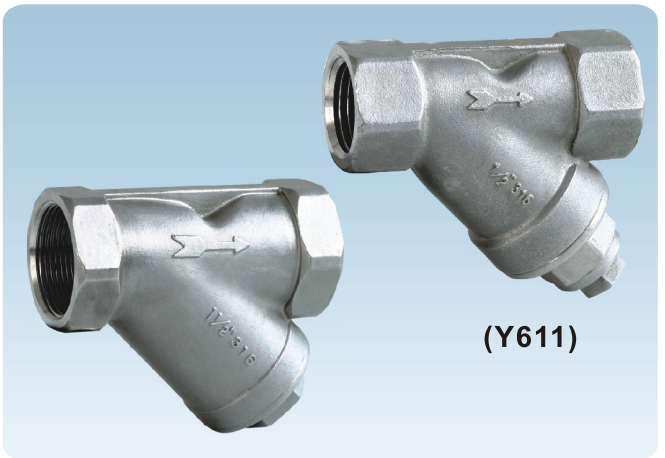

特征 Features:

- 800PSI(PN40)
- 脱蜡精密铸造 Investment Casting
- 产品通过PED97/23/EC(CE0036) 认证
  PED97/23/EC(CE0036) Approved
- 铸件通过 AD2000-W0认证
  Casting Approved AD2000-W0
- 螺纹符合 Thread:ASME B1.20.1, BS21.0,
  DIN2999/259 , ISO228-1, JIS B 0203, ISO7/1
- 检查与测试 Inspection Testing:API598,EN12266

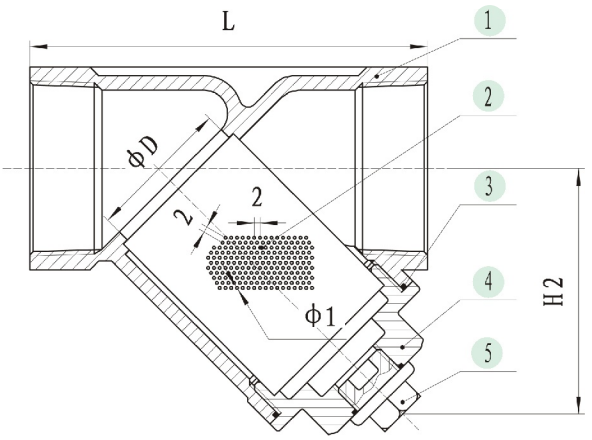

材质清单 Material List

序号 Item	名称 Designation	材质 Material
1	阀体 Body	CF8/CF8M
2	过滤网 Screen	SUS304
3	阀盖垫圈 Gasket	PTFE
4	阀盖 Bonnet	CF8/CF8M
5	阀盖堵头 Discharge Plug	CF8/CF8M

尺寸表 Dimension Table

项目Item / 尺寸Size	1/4"	3/8"	1/2"	3/4"	1"	11/4"	11/2"	2"	21/2"	3"
D	12	12	15	20	25	32	40	50	65	76
H2	42	42	42	51	65	66	75	86	112	123
L	65	65	65	80	90	105	120	138	183	198

水嘴球阀
BIBCOCK VALVE

B261

特征 Features:

- 200PSI/PN16
- 脱蜡精密铸造 Investment Casting
- 产品通过PED97/23/EC(CE0036) 认证
  PED97/23/EC(CE0036) Approved
- 铸件通过 AD2000-W0认证
  Casting Approved AD2000-W0
- 螺纹符合 Thread:ASME B1.20.1, BS21.0,
  DIN2999/259, ISO228-1,JIS B0203, ISO7/1
- 检查与测试 Inspection Testing:API598,EN12266

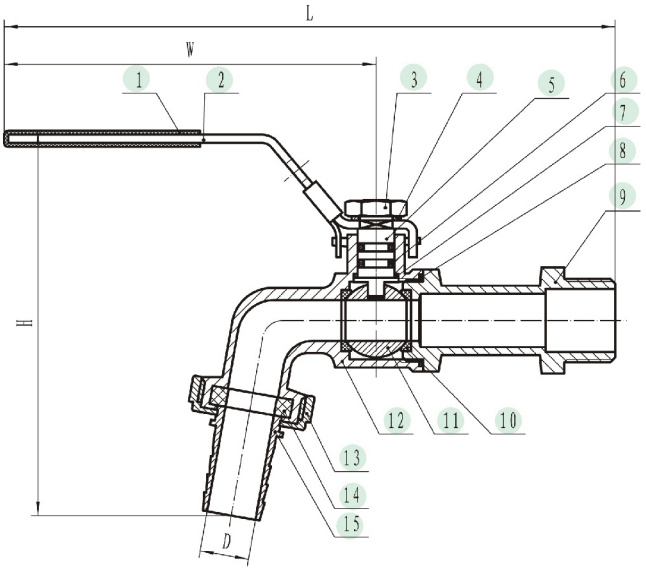

材质清单 Material List

序号 Item	名称 Designation	材质 Material
1	手柄套 Plastic Cover	PVC树脂 Plastic
2	手柄 Handle	SUS304
3	螺母 Stem Nut	SUS304
4	弹簧垫圈 Thrust Washer	SUS304
5	阀杆 Stem	SUS304
6	O型密封圈 O-ring	NBR
7	阀杆垫圈 Stem Seal	PTFE
8	阀盖垫圈 Body Seal	PTFE
9	阀盖 Cap	CF8/CF8M
10	阀座 Seat	RPTFE
11	阀球 Ball	CF8/CF8M
12	阀体 Body	CF8/CF8M
13	锁紧螺母 Nut	CF8/CF8M
14	密封圈 Ring	NBR
15	水管接头 Hose	CF8/CF8M

尺寸表 Dimension Table

尺寸Size / 项目Item	1/2"	3/4"	1"
D	12	16	20
H	91	102	116
W	92	92	92
L	149	158	145

截止阀-Ⅰ型
GLOBE VALVE

G801

特征 Features:

- 200PSI/PN16
- 脱蜡精密铸造 Investment Casting
- 产品通过PED97/23/EC(CE0036)认证
  PED97/23/EC(CE0036) Approved
- 铸件通过 AD2000-W0认证
  Casting Approved AD2000-W0
- 螺纹符合Thread:ASME B1.20.1, BS21.0,
  DIN2999/259, ISO228-1, JIS B 0203,ISO7/1
- 检查与测试 Inspection Testing:API598,EN12266

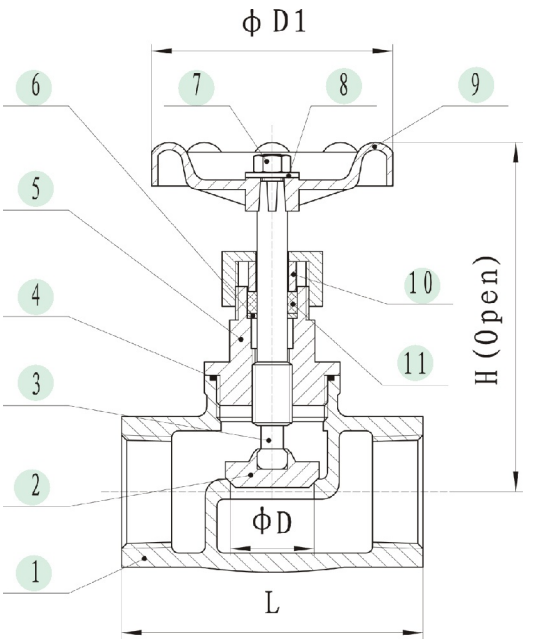

材质清单 Material List

序号 Item	名称 Designation	材质 Material
1	阀体 Body	CF8/CF8M
2	阀瓣 Petal	CF8/CF8M
3	阀杆 Stem	SUS304
4	阀盖垫圈 Gasket	PTFE
5	阀盖 Cap	CF8/CF8M
6	垫片 Washer	SUS304
7	螺母 Nut	SUS304
8	垫片 Ring	SUS304
9	手轮 Handwheel	ALUMINUM ALLOY
10	格兰 Gland Ring	SUS304
11	阀杆填料 Stem Packing	PTFE

尺寸表 Dimension Table

项目Item / 尺寸Size	1/2"	3/4"	1"	11/4"	11/2"	2"
D	15	20	25	32	40	50
H	95	106	118	144	152	172
D1	70	70	80	100	100	100
L	66	80	90	105	120	141

闸阀
GATE VALVE

G901

特征 Features:

- 200PSI/PN16
- 脱蜡精密铸造 Investment Casting
- 产品通过PED97/23/EC(CE0036)认证
  PED97/23/EC(CE0036) Approved
- 铸件通过 AD2000-W0认证
  Casting Approved AD2000-W0
- 螺纹符合 Thread:ASME B1.20.1, BS21.0, DIN2999/259, ISO228-1, JIS B 0203,ISO7/1
- 检查与测试 Inspection Testing:API598,EN12266

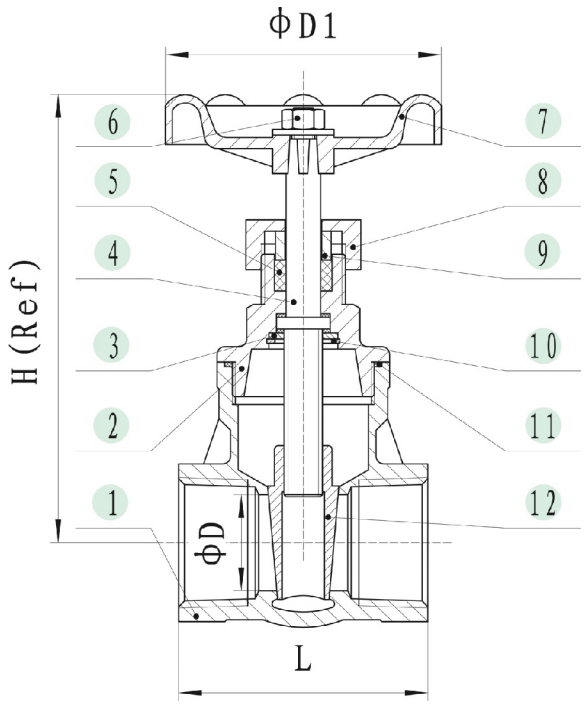

材质清单 Material List

序号 Item	名称 Designation	材质 Material
1	阀体 Body	CF8/CF8M
2	阀盖 Bonnet	CF8/CF8M
3	止退垫片 Stop Ring	SUS304
4	阀杆 Stem	SUS304
5	阀杆填料 Packing	PTFE
6	螺母 Handwheel Nut	SUS304
7	手轮 Handwheel	ALUMINUM ALLOY
8	阀帽 Packing Nut	SUS304
9	格兰 Ring	SUS304
10	锁紧螺母 Lock Nut	SUS304
11	阀盖垫圈 Gasket	PTFE
12	闸板 Disc	CF8/CF8M

尺寸表 Dimension Table

尺寸Size / 项目Item	1/2"	3/4"	1"	11/4"	11/2"	2"
D	15	20	25	32	40	50
H	92	99	113	128	147	168
D1	70	70	80	80	100	100
L	55	60	66	76	86	96

旋启式止回阀
SWING CHECK VALVE

C401

特征 Features:

- 200PSI/PN16
- 脱蜡精密铸造 Investment Casting
- 精密研磨 Precise Grinding
- 产品通过PED97/23/EC(CE0036) 认证
  PED97/23/EC(CE0036) Approved
- 铸件通过 AD2000-W0认证
  Casting Approved AD2000-W0
- 螺纹符合 Thread:ASME B1.20.1, BS21.0,
  DIN2999/259, ISO228-1, JISB 0203,ISO7/1
- 检查与测试 Inspection Testing:API598,EN12266

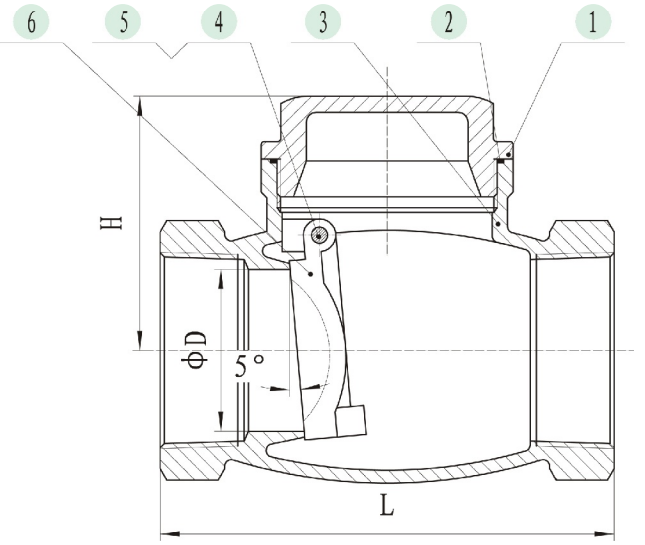

材质清单 Material List

序号 Item	名称 Designation	材质 Material
1	阀盖 Bonnet	CF8/CF8M
2	阀盖垫圈 Gasket	PTFE
3	阀体 Body	CF8/CF8M
4	销轴 Hanger Pin	SUS304
5	垫片 Plug Gasket	PTFE
6	挡板 Disc	CF8/CF8M

尺寸表 Dimension Table

尺寸Size / 项目Item	1/2"	3/4"	1"	11/4"	11/2"	2"	21/2"	3"
D	15	20	25	32	38	50	62	75
H	41	53	60	60	75	79	90	100
L	65	80	90	105	120	140	156	188

Y型弹簧止回阀
Y-SPRING CHECK VALVE

C501

特征 Features:

- 800PSI/PN40
- 脱蜡精密铸造 Investment Casting
- 产品通过PED97/23/EC(CE0036) 认证
  PED97/23/EC(CE0036) Approved
- 铸件通过 AD2000-W0认证
  Casting Approved AD2000-W0
- 螺纹符合 Thread:ASME B1.20.1, BS21.0, DIN2999/259, ISO228-1,JIS B0203,ISO7/1
- 检查与测试 Inspection Testing:API598,EN12266

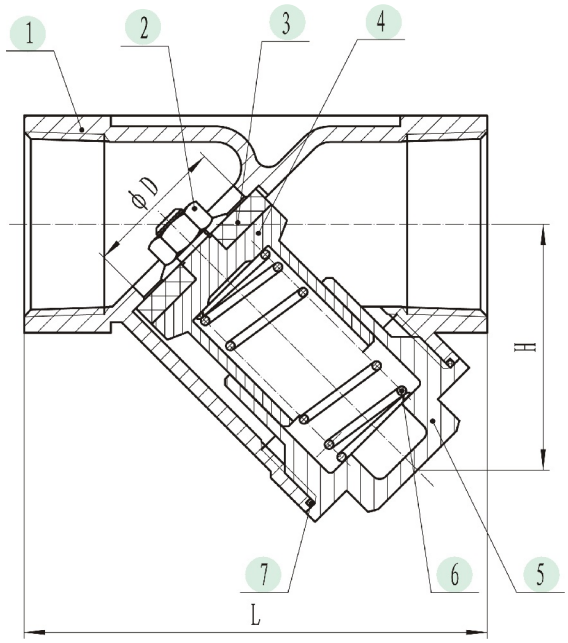

材质清单 Material List

序号 Item	名称 Designation	材质 Material
1	阀体 Body	CF8/CF8M
2	螺母 Nut	SUS304
3	密封垫 Disc Seat	PTFE
4	阀瓣 Disc	CF8/CF8M
5	阀盖 Bonnet	CF8/CF8M
6	弹簧 Spring	SUS304
7	阀盖垫圈 Gasket	PTFE

尺寸表 Dimension Table

尺寸Size / 项目Item	1/4"	3/8"	1/2"	3/4"	1"	11/4"	11/2"	2"	21/2"	3"
D	12	12	15	20	25	32	40	50	65	76
H	35	35	35	45	57	58	66	78	102	116
L	65	65	65	80	90	105	120	138	183	198

1PC弹簧立式止回阀
1-PC SPRING VERTICAL CHECK VALVE
C101

特征 Features:

- 800PSI/PN40
- 脱蜡精密铸造 Investment Casting
- 卫生设计Sanitary Design
- 产品通过PED97/23/EC(CE0036)认证
  PED97/23/EC(CE0036) Approved
- 铸件通过AD2000-W0认证
  Casting Approved AD2000-W0
- 螺纹符合 Thread:ASME B1.20.1, BS21.0, DIN2999/259, ISO228-1, JIS B 0203, ISO7/1
- 检查与测试 Inspection Testing:API598,EN12266

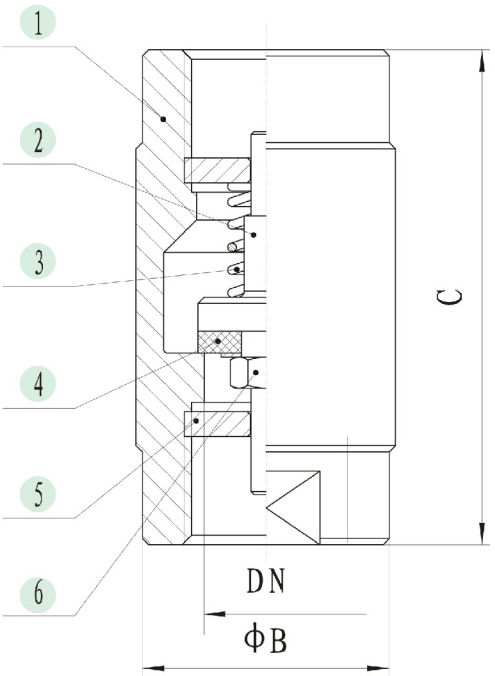

材质清单 Material List

序号 Item	名称 Designation	材质 Material
1	阀体 Body	CF8/CF8M
2	阀杆 Stem	CF8/CF8M
3	弹簧 Spring	SUS304/SUS316
4	密封垫 Seat	PTFE
5	侧塞 Stopper	SUS304/SUS316
6	螺母 Nut	SUS304

尺寸表 Dimension Table

尺寸Size / 项目Item	1/4"	3/8"	1/2"	3/4"	1"	11/4"	11/2"	2"	21/2"	3"
DN	8	10	15	20	25	32	38	50	65	76
B	21	24	31	38	48	52	60	74	94	116
C	60	65	80	80	90	95	110	118	135	145

2PC弹簧立式止回阀
2-PC SPRING VERTICAL CHECK VALVE
C201

特征 Features:

- 200PSI/PN16
- 脱蜡精密铸造 Investment Casting
- 产品通过PED97/23/EC(CE 0036) 认证
  PED97/23/EC(CE 0036) Approved
- 铸件通过 AD2000-W0认证
  Casting Approved AD2000-W0
- 螺纹符合 Thread:ASME B1.20.1, BS21.0, DIN2999/259, ISO228-1, JIS B 0203,ISO7/1
- 检查与测试 Inspection Testing:API598,EN12266

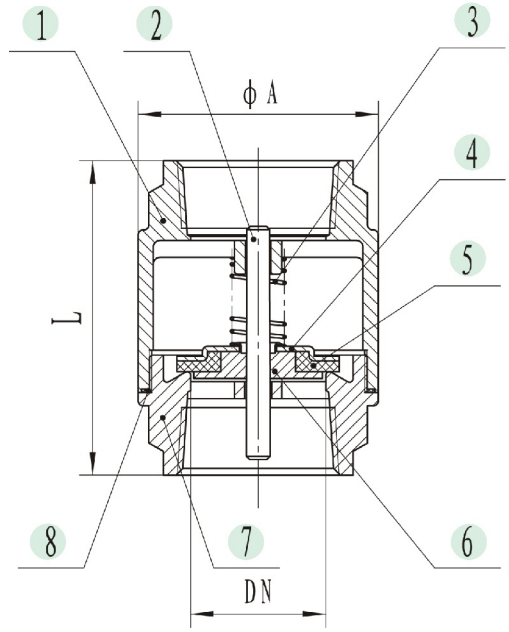

材质清单 Material List

序号 Item	名称 Designation	材质 Material
1	阀体 Body	CF8/CF8M
2	阀杆 Stem	SUS304/SUS316
3	弹簧 Spring	SUS304/SUS316
4	压盖 Stock	SUS304/SUS316
5	密封圈 Seat	NBR/VITON
6	托盘 Press Cap	SUS304/SUS316
7	阀盖 Cap	CF8/CF8M
8	阀盖垫圈 Body Packing	PTFE

尺寸表 Dimension Table

尺寸Size / 项目Item	3/8"	1/2"	3/4"	1"	11/4"	11/2"	2"	21/2"	3"	4"
DN	13	15	20	25	31	40	50	65	76	94
ϕA	30	34.5	41.5	48	60.5	71	87	110	125	155
L	54	57	64	75	82	93	100	120	140	158

对夹式止回阀
DISK CHECK VALVE

C601

特征 Features:

- 200PSI/PN16
- 脱蜡精密铸造 Investment Casting
- 精密研磨 Precise Grinding
- 产品通过PED97/23/EC(CE0036) 认证
  PED97/23/EC(CE0036) Approved
- 铸件通过 AD2000-W0认证
  Casting Approved AD2000-W0
- 检查与测试 Inspection Testing：API598，EN12266

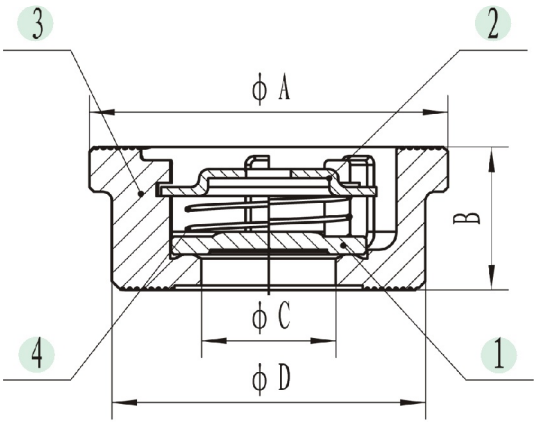

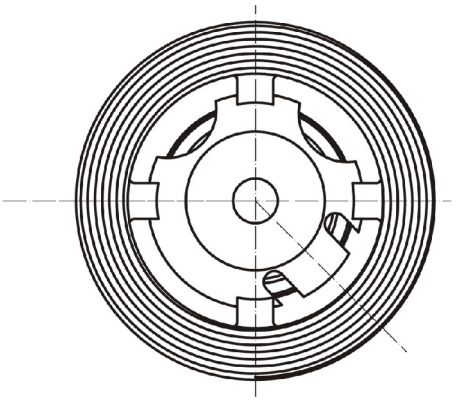

材质清单 Material List

序号 Item	名称 Designation	材质 Material
1	挡板 Disc	SUS304/SUS316
2	定位片 Stopper	SUS304/SUS316
3	阀体 Body	CF8/CF8M
4	弹簧 Spring	SUS304/SUS316

尺寸表 Dimension Table

尺寸Size / 项目Item	DN15	DN20	DN25	DN32	DN40	DN50	DN65	DN80	DN100
A	40	47	56	72	82	95	115	132	152
B	16	19	21	28	32	40	46	50	60
C	15	20	25	31	39	48	63	75	88
D	35	42	50	64	76	89	108	124	145

精密配件
Investment Casting

汽车配件
Auto Parts

厚　行　天　下　德　润　人　间

沧州市厚德不锈钢制品有限公司
地址：河北省沧州市运河区张庄子工业园
邮编：061001
电话：+86-317- 2207867　2207919
传真：+86-317-4048973
Http://www.houdecasting.com
E-mail:cangzhouhoude@163.com sale@houdecasting.com
CANGZHOU HOUDE STAINLESS STEEL PRODUCTS CO.,LTD.
Add: Zhangzhuangzi Industrial Zone, Yunhe Area, Cangzhou, Hebei, China　P.C. 061001
Tel: +86-317-2207867　2207919
Fax: +86-317-4048973
Http://www.houdecasting.com
E-mail: cangzhouhoude@163.com sale@houdecasting.com

海兴厚德不锈钢制品有限公司
地址：河北省沧州市海兴县赵毛陶镇尤村东
邮编：061200
电话：+86-317-6666018　6655108
传真：+86-317-6666015
Http://www.haixinghoude.com
E-mail:haixinghoude@163.com sale@houdecasting.com
HAIXING HOUDE STAINLESS STEEL PRODUCTS CO.,LTD.
Add: Youcun, Zhaomaotao, Haixing, Cangzhou, Hebei, China　P.C. 061200
Tel: +86-317-6666018　6655108
Fax: +86-317-6666015
Http://www.haixinghoude.com
E-mail: haixinghoude@163.com sale@houdecasting.com